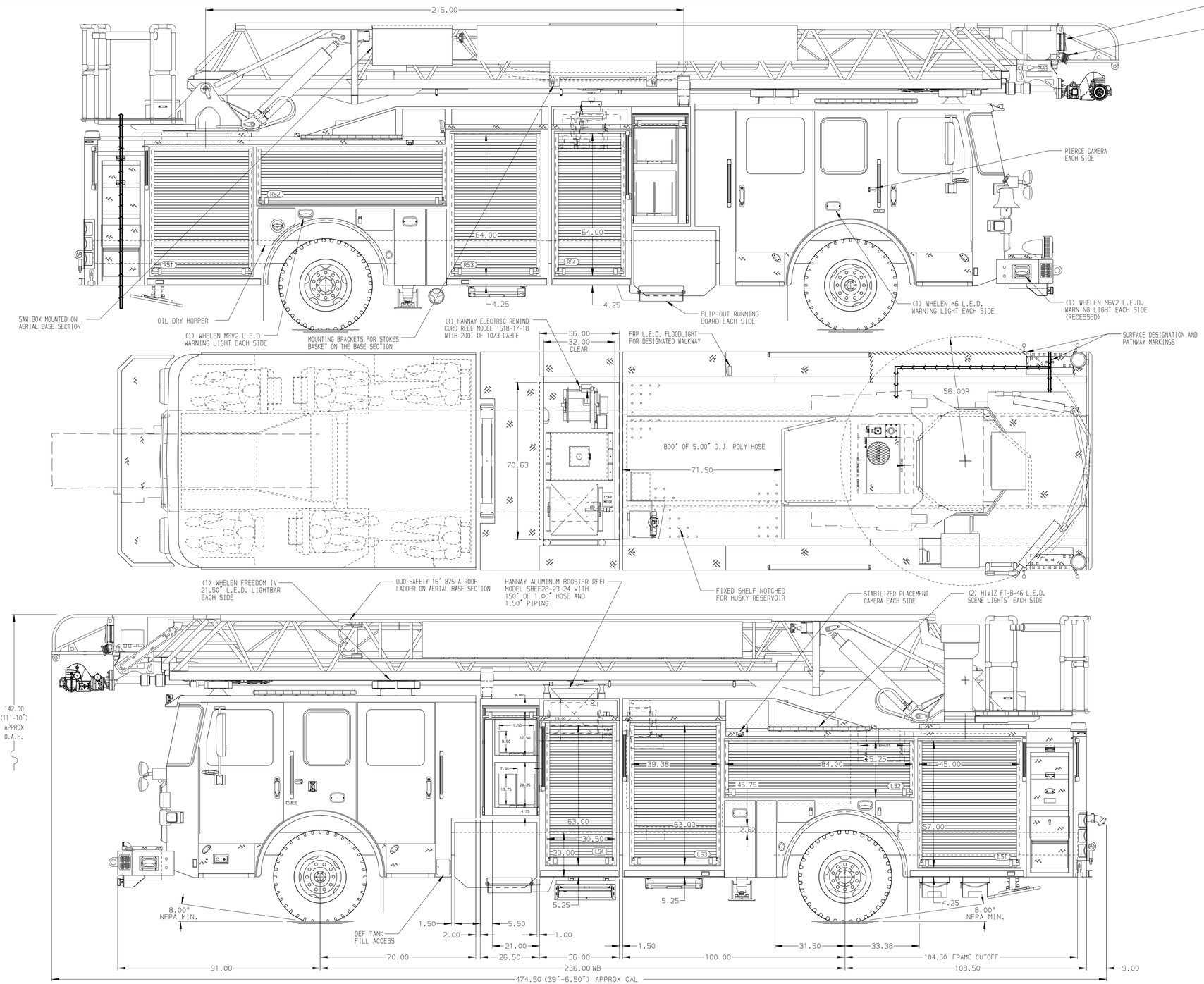

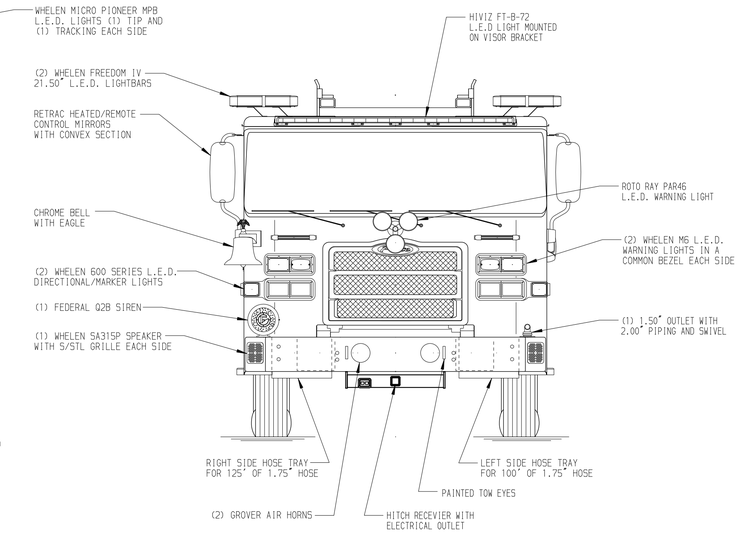

BODY	WATER TANK
107' ASL Aluminum Body PUC	500 Gallon Poly Water Tank
COMPT,LEFT SIDE FRONT	Foam System
Full Height Rollup Forward	Husky 3 Single Agent Foam System
COMPT,LEFT SIDE REAR	Foam Cell
Full Height Rollup Rearward	30 Gallon Poly Foam Tank in Cargo Area
COMPT,RIGHT SIDE FRONT	
Full Height Rollup Forward	
COMPT,RIGHT SIDE REAR	
Full Height Rollup Rearward	

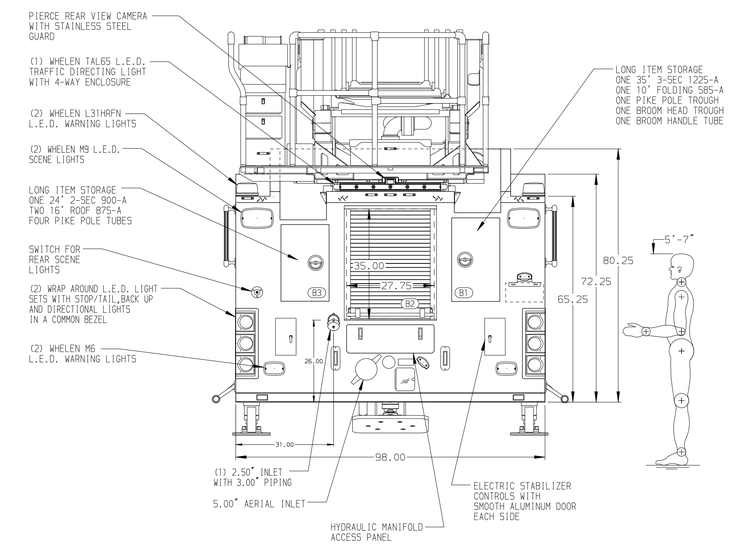

CHASSIS	CAB	AXLE,FRONT,CUSTOM	TRANSMISSION	PUMPHOUSE	CROSSLAYS,1.50"	SPEEDLAYS	SAFETY
Enforcer Chassis, PUC	7000 Enforcer Cab, PUC	24,000 Lb TAK-4 Axle	ALLison 5th Gen, 4000 EVS P	Control Zone, PAL/PAP PUC	(2) 1.50", Poly Trays, 200'	Speedlays Not Required	Side Roll and Frontal Impact Protection
ENGINE	BUMPER	AXLE,REAR		PUMP	CROSSLAYS,2.50"	GENERATOR	
510 HP Paccar MX13 Engine	22" Extended Painted Steel	33,500 Lb Meritor Axle		1500 GPM Pierce PUC	(1) 2.50", Poly Tray, 200'	Harrison 6kW MSV Hydraulic	

NOTE

DIMENSIONS SHOWN ARE APPROXIMATE AND ARE SUBJECT TO MINOR DEVIATIONS AS MAY OCCUR OR BE NECESSARY IN CONSTRUCTION.
MINOR DETAILS NOT SHOWN.

1. 20A BLUE SEA SURE-EJECT SHORELINE RECEPTACLE LOCATED ON DRIVER SIDE OF THE CAB
2. AIR INLET WITH DISCONNECT COUPLING IN THE DRIVER SIDE STEPWELL
3. AIR OUTLET WITH SHUT-OFF VALVE IN THE DRIVER SIDE STEPWELL
4. BATTERY CHARGER LOCATED BEHIND DRIVER SEAT
5. BATTERY CHARGER INDICATOR LOCATED ON DRIVER'S SEAT RISER
6. ROSCO CAMERA SYSTEM IN CAB PER SHOP ORDER
7. DUAL L.E.D. LIGHT STRIPS LOCATED IN HOSE BED
8. EIGHT ADJUSTABLE SHELVES IN COMPARTMENTS PER SHOP ORDER
9. ONE ADJUSTABLE SLIDE-OUT TRAY IN COMPARTMENT PER SHOP ORDER
10. THREE FLOOR MOUNTED SLIDE-OUT TRAYS IN COMPARTMENTS PER SHOP ORDER
11. ONE SWING OUT TOOL GRID SYSTEM IN COMPARTMENT PER SHOP ORDER
12. CTECH DRAWER ASSEMBLY IN COMPARTMENT PER SHOP ORDER
13. PAC TRAC ON THE WALLS OF TWO COMPARTMENTS PER SHOP ORDER
14. TWO VERTICAL PARTITIONS IN COMPARTMENTS PER SHOP ORDER
15. CIRCUIT BREAKER PANEL IN COMPARTMENT PER SHOP ORDER
16. 120V POWER TO AERIAL TIP
17. NON-RAISED AERIAL PEDESTAL
18. WIRELESS CAMERA LOCATED AT AERIAL EGRESS
19. LIFTING EYE ROPE RESCUE ATTACHMENT AT AERIAL TIP
20. LYFEPULLEY RESCUE SYSTEM AT AERIAL TIP
21. AIR HORN CONTROL AT AERIAL TURNTABLE
22. WIRELESS MONITOR CONTROLS AT PUMP PANEL
23. 1500 GPM HIGH FLOW WATERWAY
24. NO LIMITED RETRACTION REQUIRED
25. ONE 9000# WARN PORTABLE RECEIVER TYPE WINCH

REV	DATE	BY	CH
D	27AUG21	TKA	JGO
C	09JUL21	TKA	THS

CHASSIS DATA
MAKE: PIERCE
MODEL: ENFORCER

Pierce MANUFACTURING INC.

TITLE: 107' ASCENDANT AERIAL LADDER AND BODY ASSEMBLY
FOR: TOWN OF ASHLAND CITY, ASHLAND CITY, TENNESSEE
DWG NO.: 35865AD

JOB NO.	SCALE	DRAWN BY	CHECKED BY	SHEET SIZE	SHEET NO.
35865	1:24	TKA	NDA	D	1 OF 1

DATE: 02MAR21 / 3MAR21

View File Created 30-AUG-2021 09:37:00