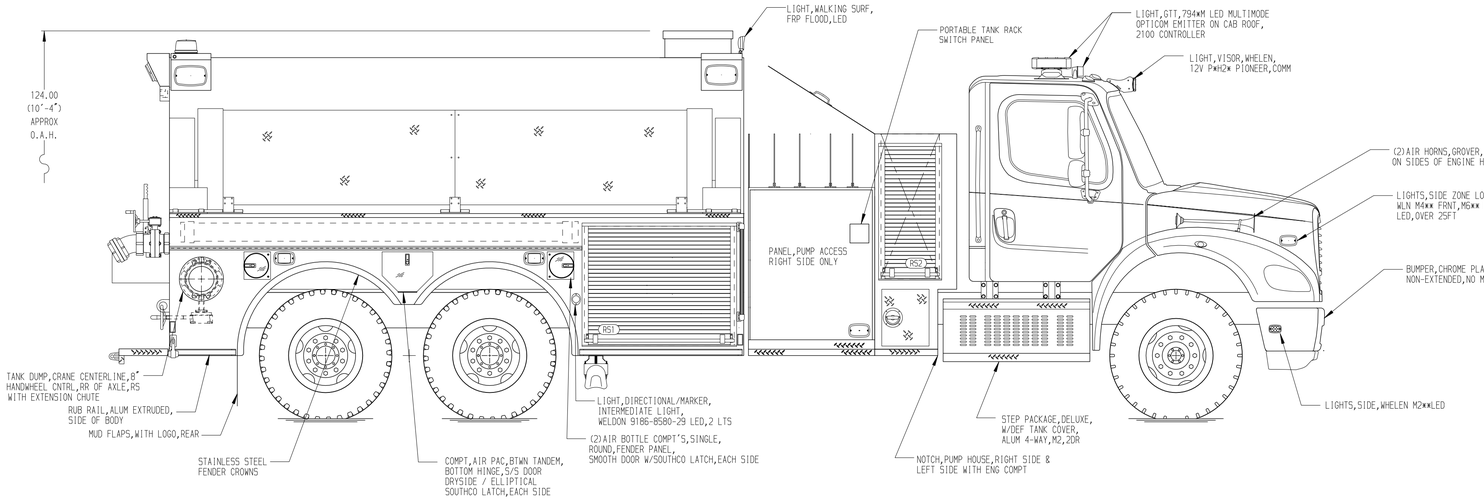

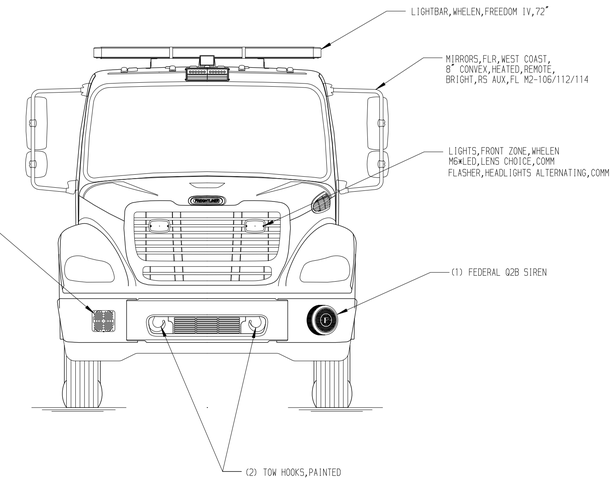

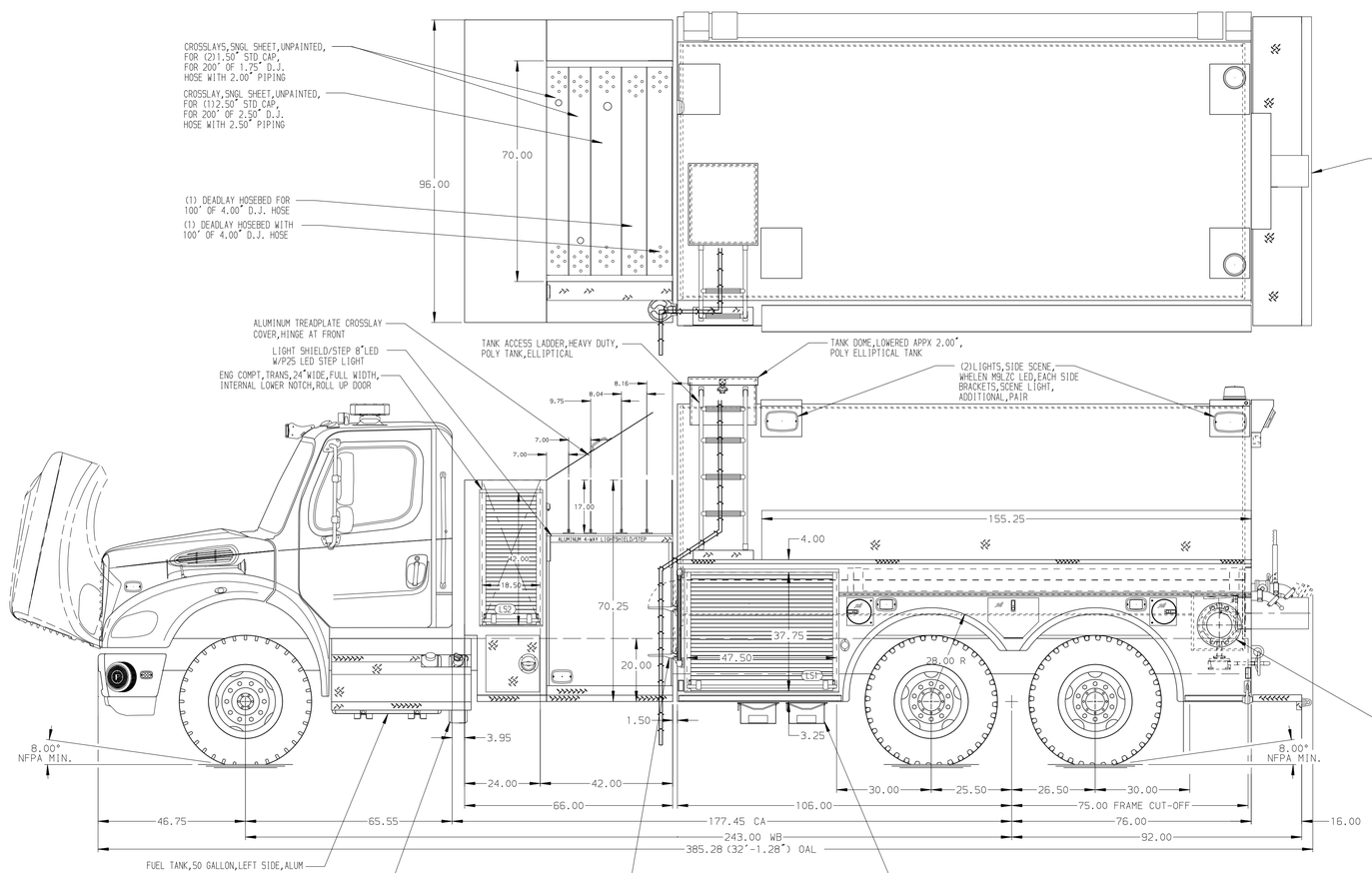

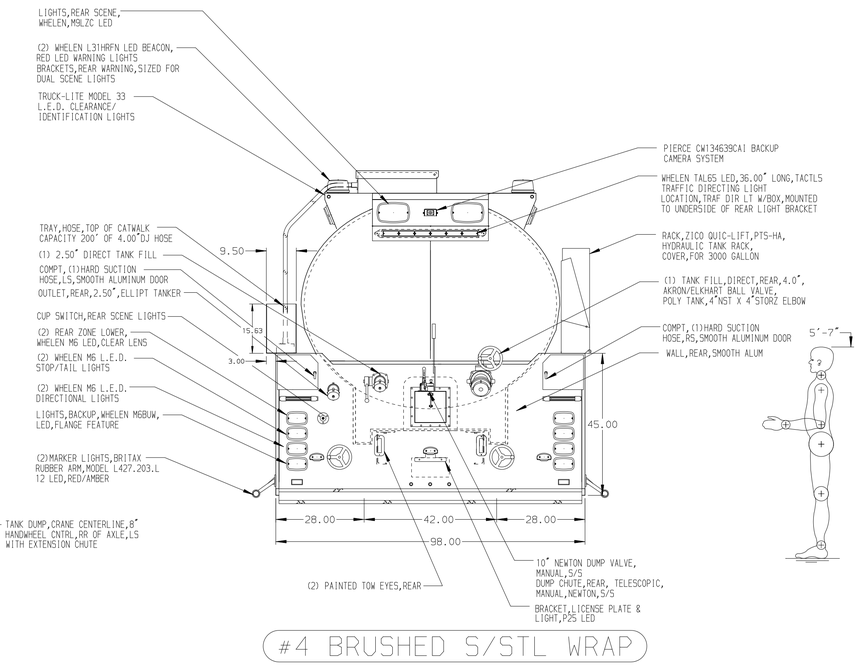

ALUMINUM BODY

#4 BRUSHED S/STL WRAP

NOTE

DIMENSIONS SHOWN ARE APPROXIMATE AND ARE SUBJECT TO MINOR DEVIATIONS AS MAY OCCUR OR BE NECESSARY IN CONSTRUCTION.
MINOR DETAILS NOT SHOWN.

REV	DATE	BY	CH
7	15JUL21		GSC

CHASSIS DATA	
MAKE	FL
MODEL	M2-112

Pierce MANUFACTURING INC.

TITLE	1000-D-2950 POLY,182"ELLIPTICAL BODY,24"ENG COMPT 42"SIDE CONTROL,(2)1.5" & (1)2.5"XLAYS, (1)5"DEADLAY
FOR	SEMINOLE COUNTY FIRE DEPARTMENT SANFORD,FLORIDA
DWG NO.	35875AD

JOB NO.	35875
SCALE	1:24
DATE	
DRAWN BY	RHU 13APR21
CHECKED BY	RWI 14APR21
SHEET SIZE	D
SHEET NO.	1 OF 1

View File Created 15-JUL-2021 11:48:33