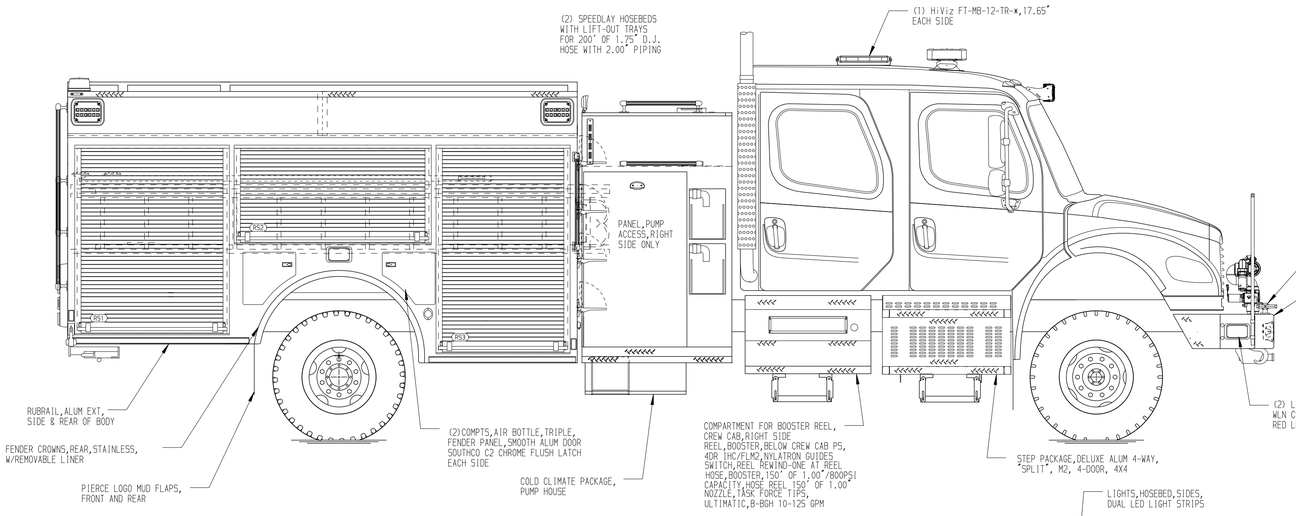

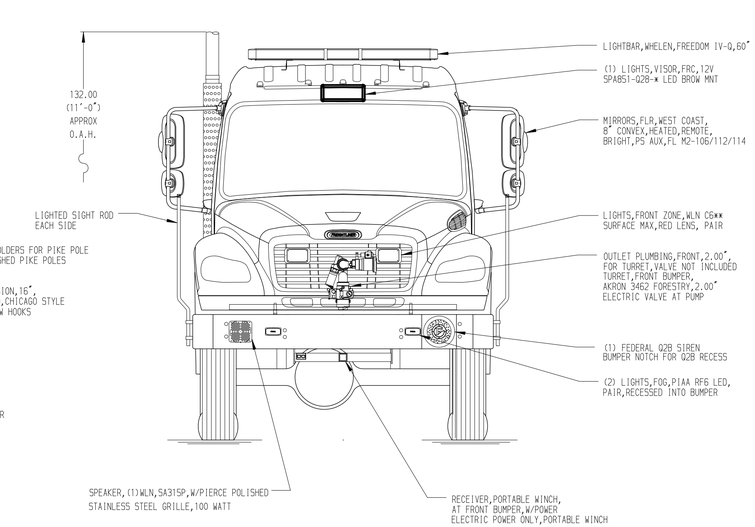

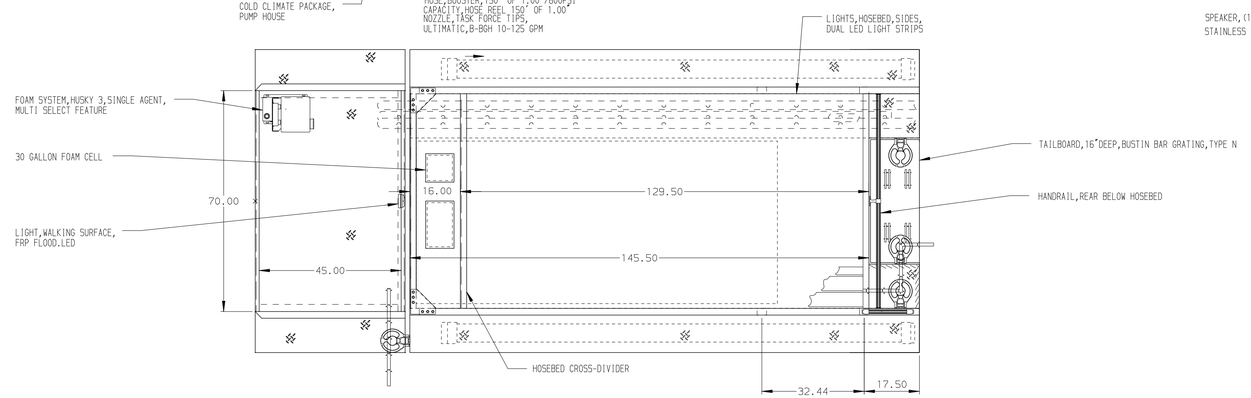

HOSEBED CAPACITIES

1. 1000' OF 1.50"FORESTRY(100'LENGTHS)
2. 400' OF 1.75" D.J. HOSE(50'LENGTHS)
3. 800' OF 4.00" HI-VOL(100'LENGTHS)
4. 800' OF 2.50" D.J. HOSE(50'LENGTHS)

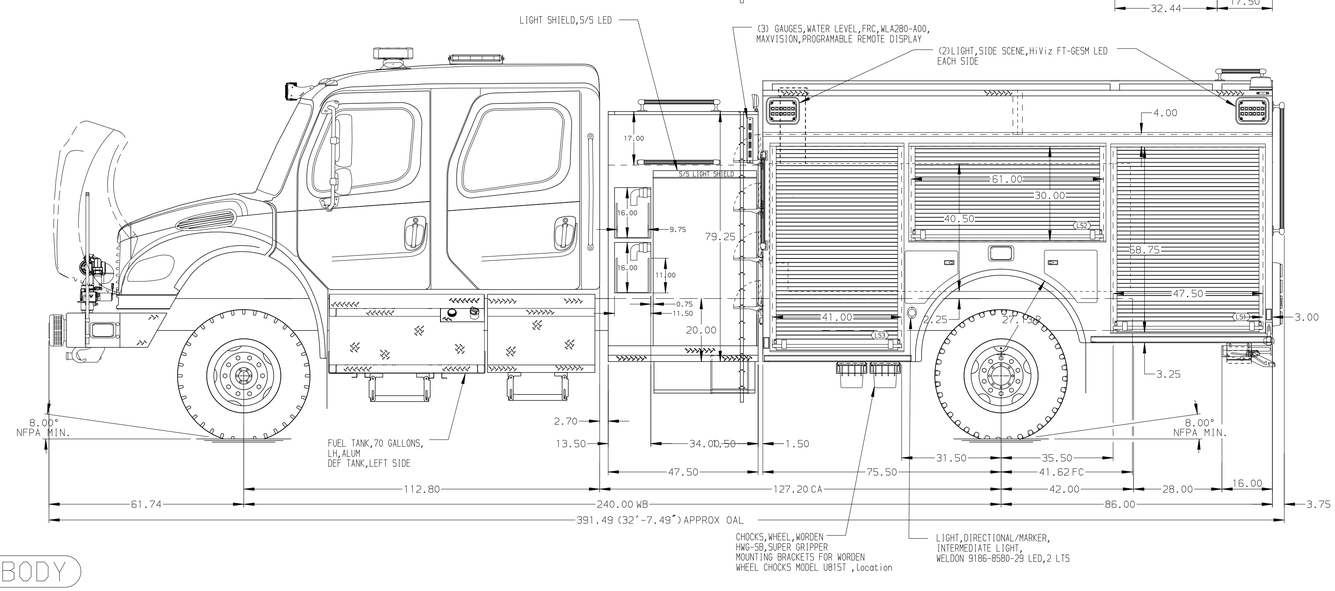

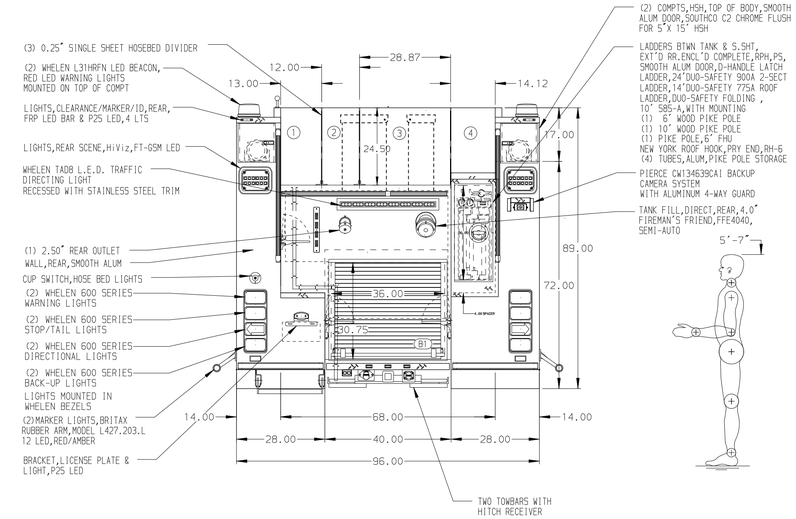

ALUMINUM BODY

NOTE

DIMENSIONS SHOWN ARE APPROXIMATE AND ARE SUBJECT TO MINOR DEVIATIONS AS MAY OCCUR OR BE NECESSARY IN CONSTRUCTION.
MINOR DETAILS NOT SHOWN.

REV	DATE	BY	CH
B	17AUG21	JAF	NAS
A	08JUL21	RHU	NAS

CHASSIS DATA — MAKE: FL — MODEL: M2-106 4X4

Pierce MANUFACTURING INC.

TITLE: 1250-D-750P,30G FOAM,161",LS&RS FL HGHT FRT & RR, 34" SIDE CONTROL,(2) 1.5" SPEEDLAYS W/TRAYS

FOR: CLEARWATER REGIONAL FIRE RESCUE SERVICES, ROCKEY MOUNTAIN HOUSE, ALBERTA

DWG NO.: 35980AD

JOB NO.	35980
SCALE	1:24
DATE	08APR21
DRAWN BY	JLA
CHECKED BY	RWI
SHEET SIZE	D
SHEET NO.	1 OF 1

View File Created 17-AUG-2021 14:24:14