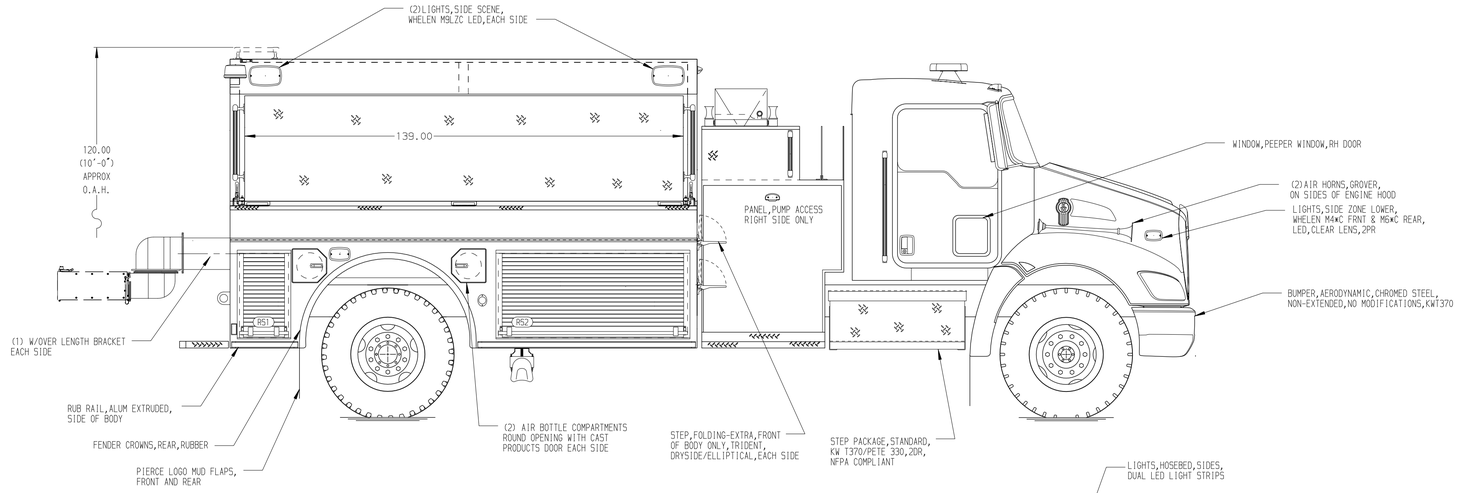

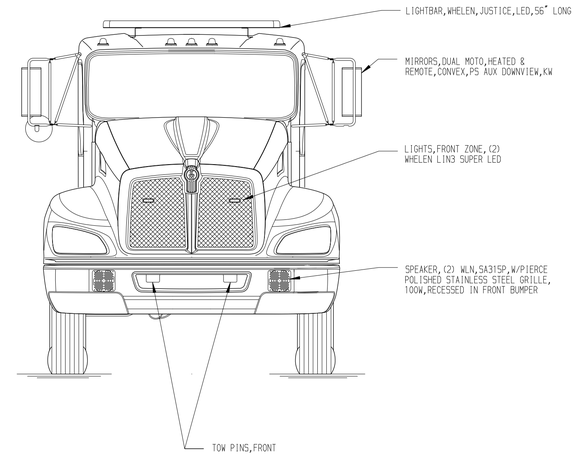

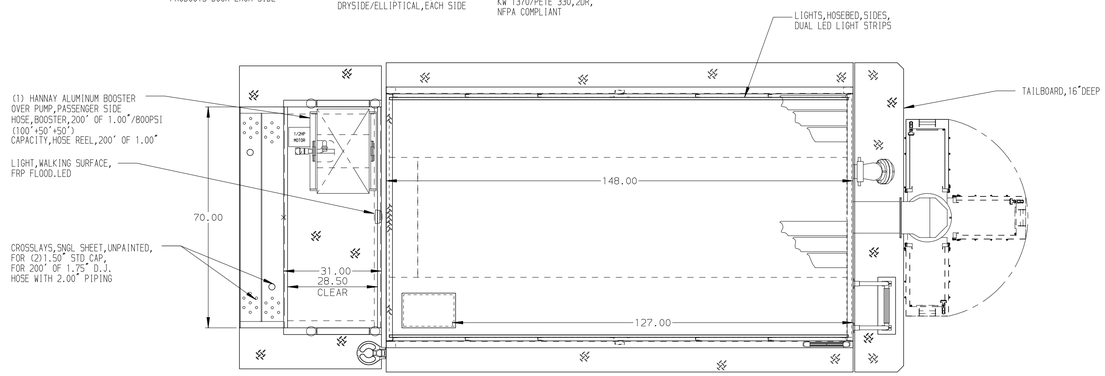

HOSEBED CAPACITIES

1. 400' OF 5.00" LDH
2. 400' OF 2.50" D.J. POLYESTER HOSE

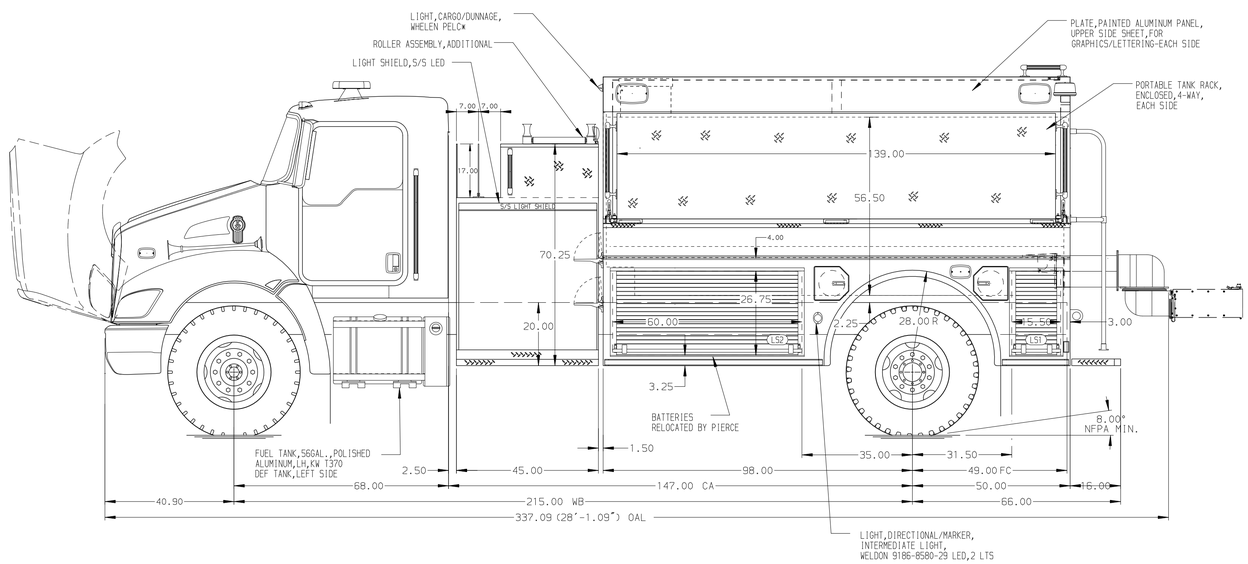

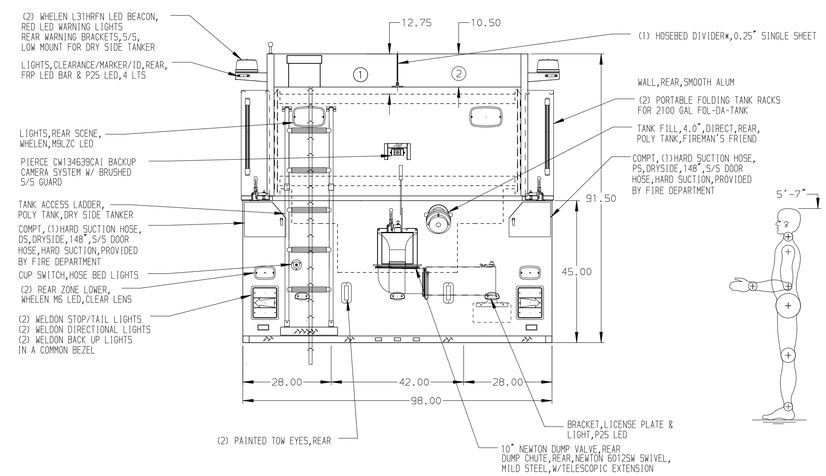

ALUMINUM BODY

NOTE

DIMENSIONS SHOWN ARE APPROXIMATE AND ARE SUBJECT TO MINOR DEVIATIONS AS MAY OCCUR OR BE NECESSARY IN CONSTRUCTION.
MINOR DETAILS NOT SHOWN.

REV	DATE	BY	CH
3	13AUG21	JLA	AJA
2	06JUL21	RHU	AJA
1	20APR21	JLA	RWI

CHASSIS DATA: MAKE KW; MODEL T-370

Pierce MANUFACTURING INC.
BRADENTON, FLORIDA

TITLE: 1000-D-2000 POLY 148" DRYSIDE BODY
45"SIDE CONTROL (2)CROSSLAYS

FOR: ROME FIRE DEPARTMENT
ROME, GEORGIA

DWG NO. 35988AD

JOB NO.	35988
SCALE	1:24
DATE	05APR21
DRAWN BY	JLA
CHECKED BY	RWI
CHECKED BY	09APR21
SHEET SIZE	D
SHEET NO.	1 OF 1

View File Created 13-AUG-2021 12:02:48