PUMPER

BODY
Long Aluminum 2nd Gen Pumper

CHASSIS
Saber FR Chassis

CHASSIS

AXLE, FRONT, CUSTOM
20,000 lb Dana Axle

AXLE, REAR
27,000 lb Dana Axle

ENGINE
450 HP Cummins L9 Engine

TRANSMISSION
Allison 5th Gen, 3000 EVS P

BUMPER
19" Extended Stainless Steel

CAB
7010 Saber FR Cab

BODY

WATER TANK
1000 Gallon New York Style Water Tank

COMPT, PUMPER, REAR
23.50" FF RollUp Rear Compt

COMPT, PUMPER, LEFT SIDE
171" RollUp Full Height & Depth Front & Rear

COMPT, PUMPER, RIGHT SIDE
171" RollUp Full Height & Depth Front & Rear

FIRE SUPPRESSION

PUMPHOUSE
45" Control Zone Side Mount

PUMP
1500 GPM Waterous CSU

CROSSLAYS, 1.50"
(2) 1.50" Standard Capacity

CROSSLAYS, 2.50"
2.50" Crosslay Not Required

SPEEDLAYS
Speedlays Not Required

GENERATOR
Generator Not Required

Foam System
Husky 3 Single Agent Foam System

Foam Cell
20 Gallon Foam Cell, Not Reduced Water

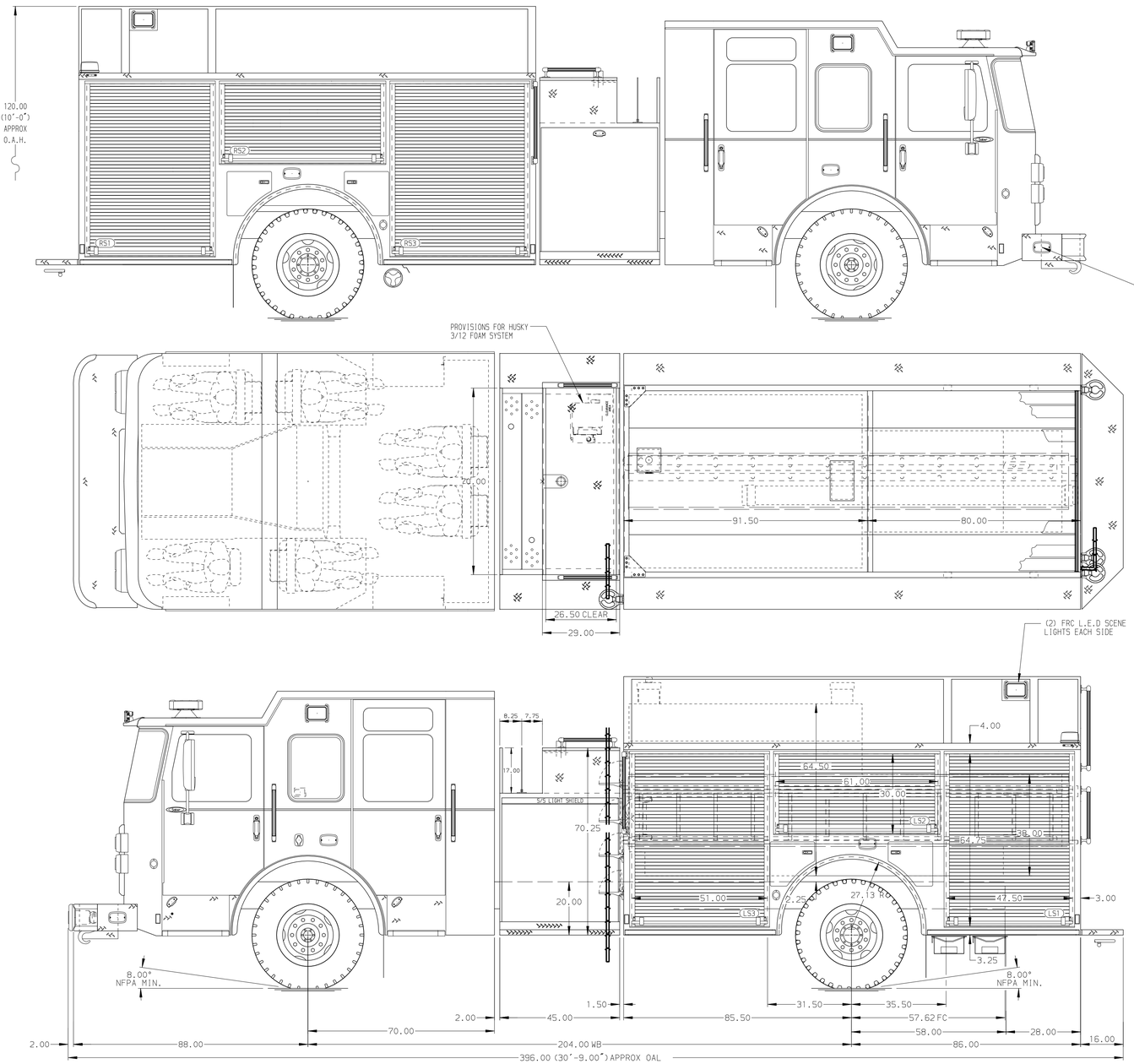

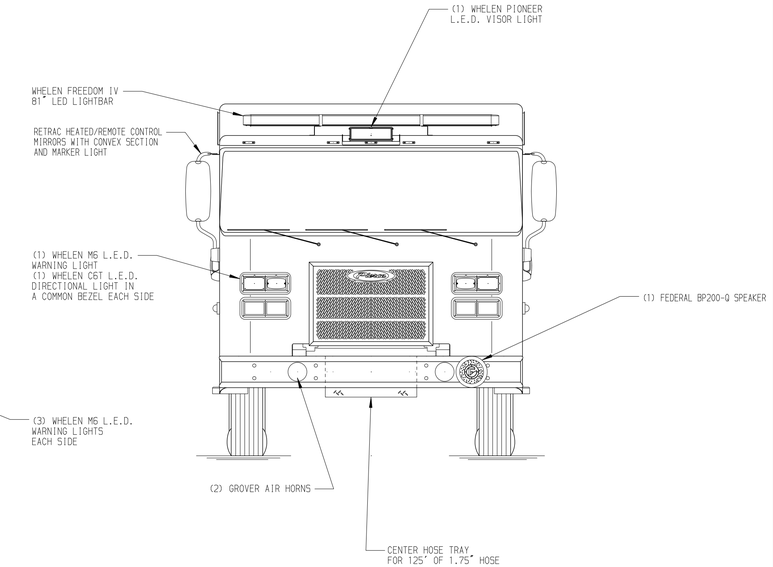

HOSEBED CAPACITY

BED 1
400' OF 3.00" D.J. POLY HOSE

BED 2
1000' OF 5.00" D.J. POLY HOSE

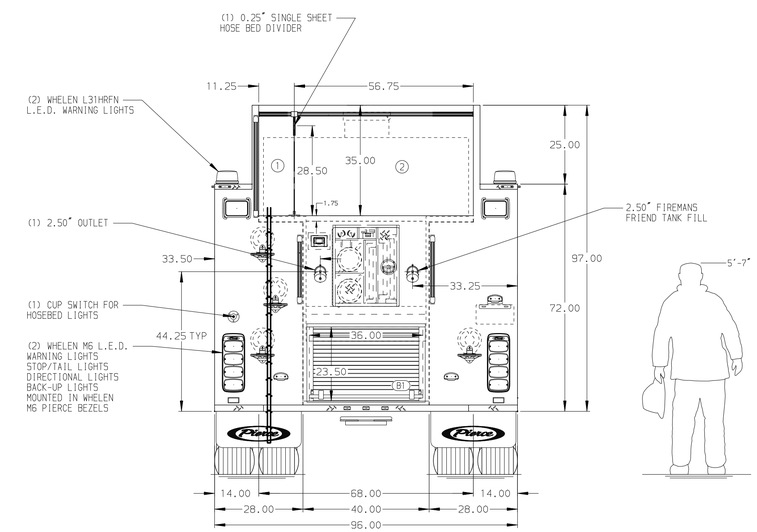

NOTE
DIMENSIONS SHOWN ARE APPROXIMATE AND ARE SUBJECT TO MINOR DEVIATIONS AS MAY OCCUR OR BE NECESSARY IN CONSTRUCTION.
MINOR DETAILS NOT SHOWN.

1. ONE 1.50 OUTLET WITH 2.00 PIPING AND SWIVEL LOCATED IN CENTER BUMPER TRAY
2. SHORELINE RECEPTACLE WITH KUSSMAUL SUPER AUTO-EJECT LOCATED ON DRIVER SIDE OF THE CAB
3. AIR INLET WITH DISCONNECT COUPLING IN THE DRIVER SIDE STEPWELL
4. BATTERY CHARGER LOCATED IN COMPARTMENT PER SHOP ORDER
5. BATTERY CHARGE INDICATOR LOCATED ON THE DRIVER SIDE THROUGH WINDOW
6. SIX ADJUSTABLE SHELVES IN COMPARTMENTS PER SHOP ORDER
7. PLUMBING FOR FUTRUE HUSKY FOAM SYSTEM

REV	DATE	BY	CH
V	28JUL21	JLA	CGA

CHASSIS DATA
MAKE: PIERCE
MODEL: SABER FR

Pierce MANUFACTURING INC.

TITLE: Pierce Pumper Approval Drawing
-
FOR: Pierce Field Unit
Bradenton, Florida

DWG NO.: 36035AD

JOB NO.	36035
SCALE	1:24
DATE	
DRAWN BY	JLA
30MAR21	
CHECKED BY	CAG
30MAR21	
SHEET SIZE	D
SHEET NO.	1 OF 1

View File Created 29-JUL-2021 07:03:57