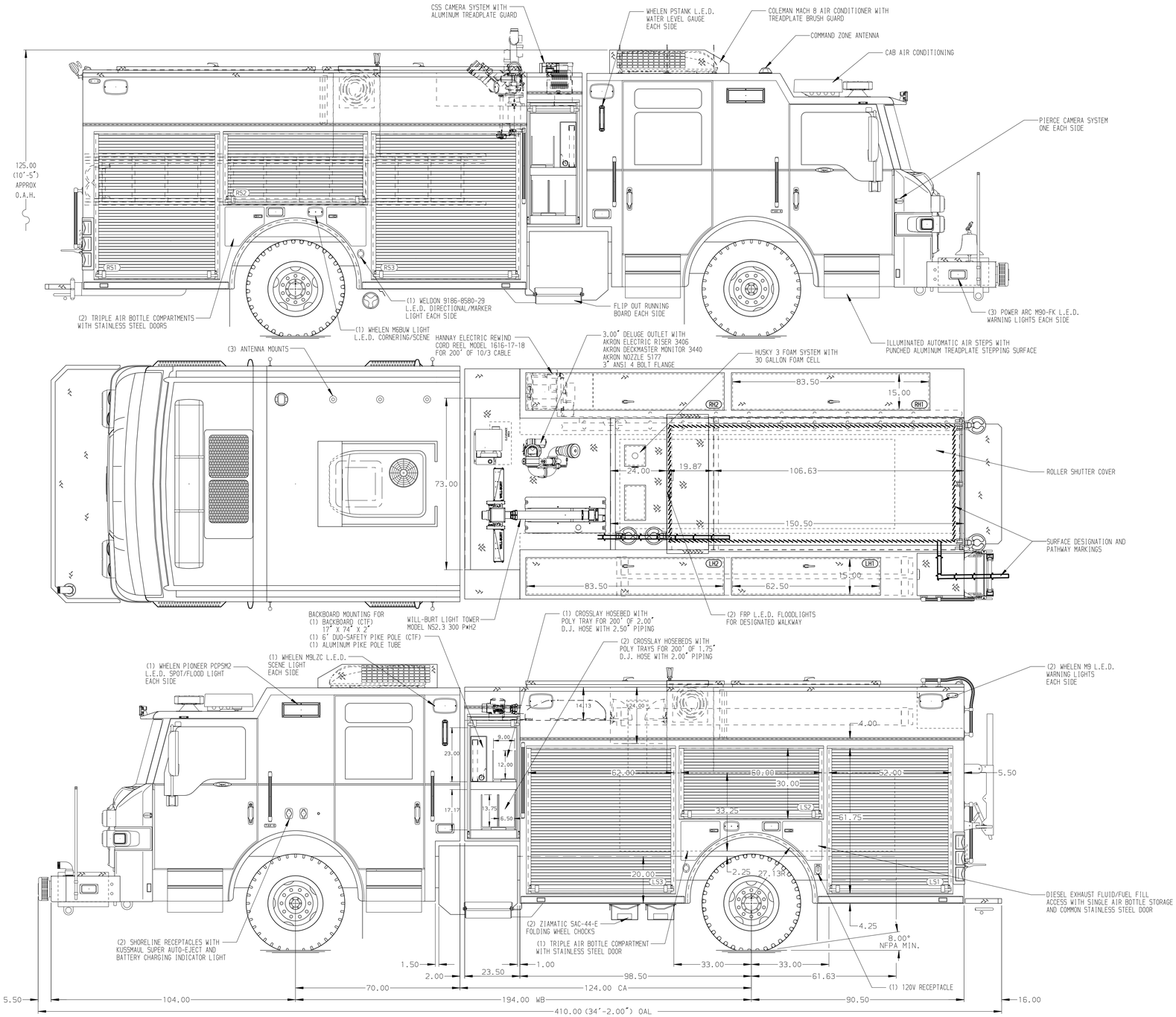

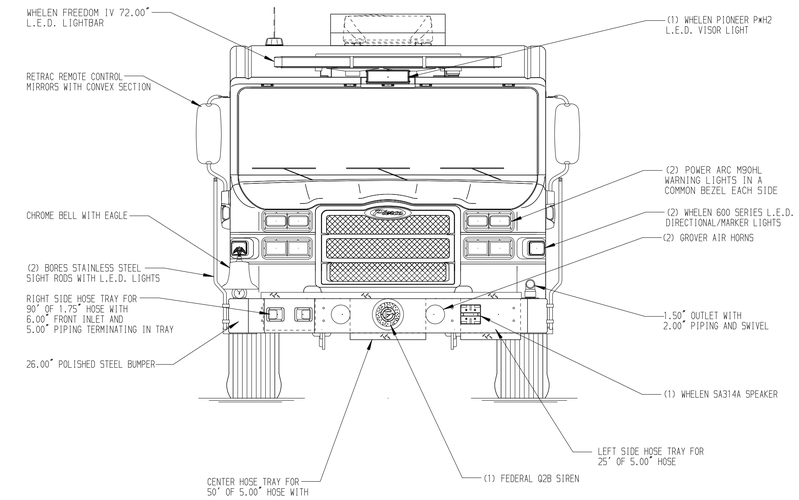

HOSEBED CAPACITIES

1. 800' OF 3.00" D.J. HOSE
2. 1000' OF 5.00" D.J. HOSE

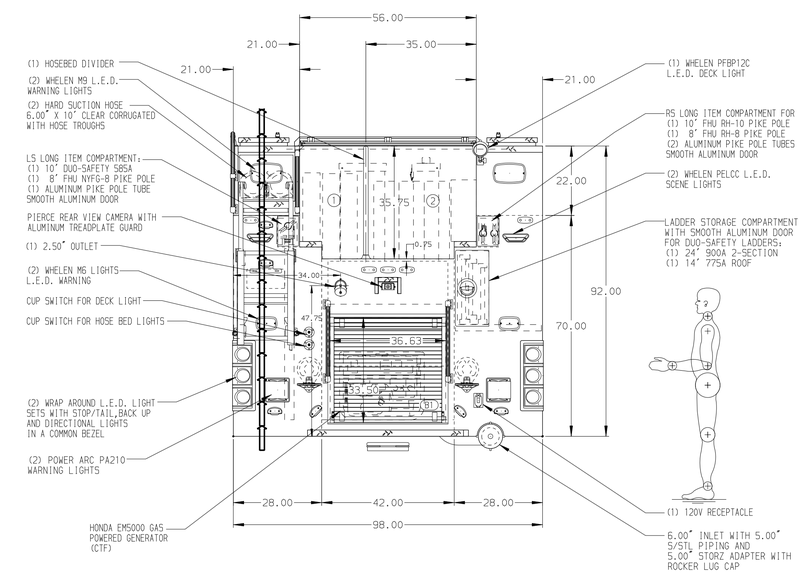

ALUMINUM BODY

FRONTAL IMPACT PROTECTION

NOTE

DIMENSIONS SHOWN ARE APPROXIMATE AND ARE SUBJECT TO MINOR DEVIATIONS AS MAY OCCUR OR BE NECESSARY IN CONSTRUCTION.
MINOR DETAILS NOT SHOWN.

1. AIR INLET/OUTLET WITH DISCONNECT FITTING LOCATED AT LS LOWER EXTERIOR PUMP PANEL
2. BATTERY CHARGER/COMPRESSOR LOCATED IN COMPARTMENT LS3
3. BATTERY CHARGE INDICATOR LOCATED NEAR DRIVER'S SEAT RISER WITH BRACKET
4. DUAL L.E.D. LIGHT STRIPS LOCATED IN HOSE BED
5. L.E.D. LIGHT STRIPS LOCATED IN HATCH COMPARTMENTS
6. LITTLE GIANT LADDER REVOLUTION XE MODEL 17 SHIPPED LOOSE
7. ONE FULL WIDTH/DEPTH ADJUSTABLE SHELF IN COMPARTMENTS LS1 AND LS3; TWO IN RS1 AND RS3
8. ONE ADJUSTABLE SPECIAL SIDE HEIGHT SHELF IN COMPARTMENT LS1
9. ONE ADJUSTABLE SLIDE-OUT TRAY IN COMPARTMENTS LS3 AND B1
10. ONE ADJUSTABLE TILTING SLIDE-OUT TRAY IN COMPARTMENTS LS1, LS2, AND LS3
11. ONE FLOOR MOUNTED SLIDE-OUT TRAY IN COMPARTMENTS LS1, LS3, RS1, AND B1
12. ONE FLOOR MOUNTED SLIDE-OUT TRAY W/SPECIAL SIDES IN COMPARTMENT RS3
13. ONE SWING-OUT ALUMINUM TOOL BOARD IN COMPARTMENT RS2
14. BOLT IN TRANSVERSE PARTITION IN HATCH COMPARTMENT RH2
15. ONE SPECIAL HEIGHT VERTICAL PARTITION IN COMPARTMENT RS3
16. POLY TOOL BOX LOCATED IN COMPARTMENT LS1
17. PEGBOARD W/TRACK ON THE BACK WALL OF COMPARTMENT RS2
18. WHELEN RS*02ZCR LIGHTS ON OUTER EDGE OF SWING-OUT TOOLBOARD IN COMPARTMENT RS2
19. CIRCUIT BREAKER PANEL IN COMPARTMENT RS3
20. JUNCTION BOX HOLDER IN COMPARTMENT RS3
21. ONE 120V RECEPTACLE IN LS1 AND RS1; TWO IN LS3

REV	DATE	BY	CH		
E	210CT21	LME	EGO	CHASSIS DATA	
D	130CT21	SAM	EGO		
C	13AUG21	SAM	EGO	MAKE	
B	21MAY21	SAM	WKL	PIERCE	
A	12MAY21	SAM	EGO	MODEL	
				IMPEL	

Pierce MANUFACTURING INC.

TITLE	1500-D-530P, 500G WATER W/30G FOAM, 189" PUC RESCUE (2) 21" HATCH COMP, (2) 1.75" XLAYS, (1) 2.50" XLAY	JOB NO.	36116
		SCALE 1:24	DATE
FOR	CITY OF CORAL GABLES CORAL GABLES, FLORIDA	DRAWN BY SAM	16APR21
		CHECKED BY EGO	16APR21
DWG NO.	36116AD	SHEET SIZE D	SHEET NO. 1 OF 1

View File Created 22-OCT-2021 07:08:05