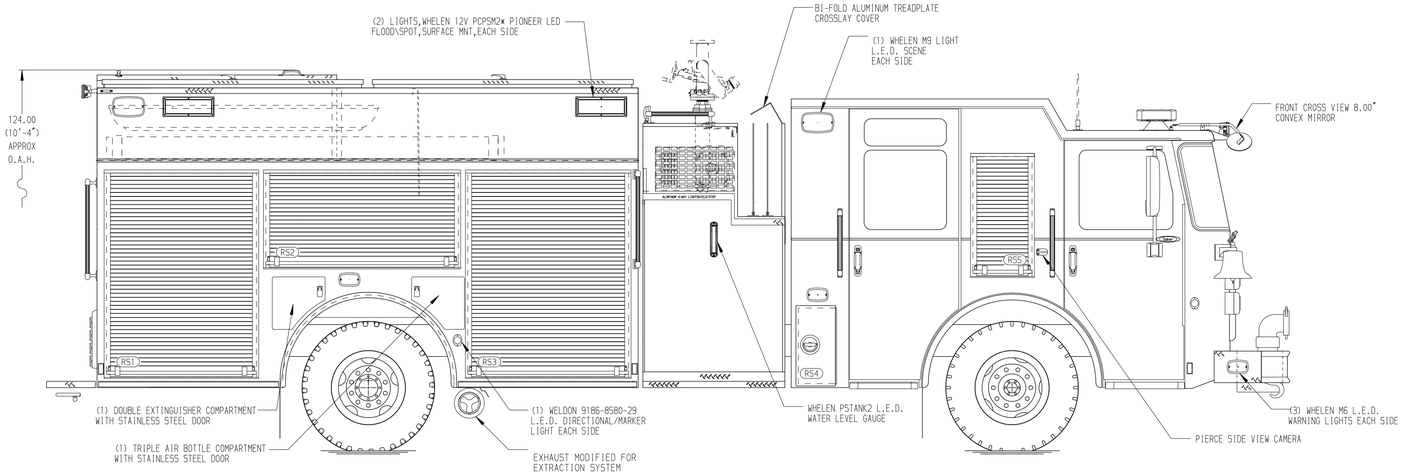

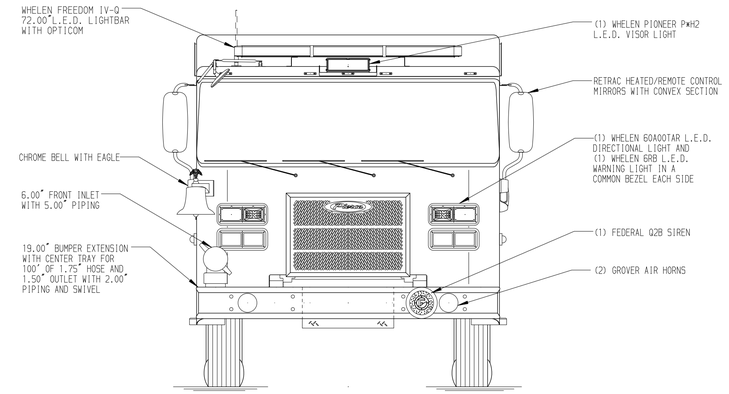

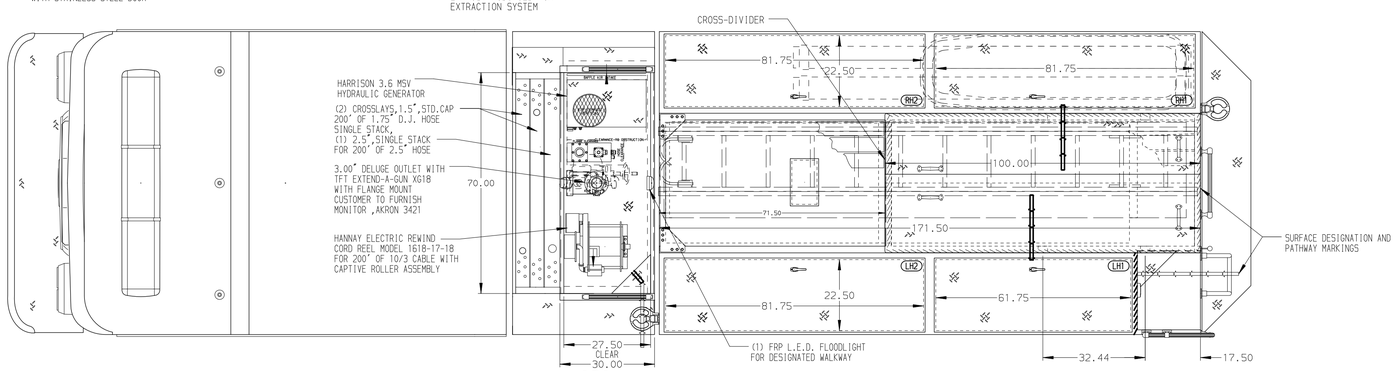

HOSEBED CAPACITIES

1 - 800' OF 5.00" D.J. POLY HOSE

2 - 600' OF 2.50" D.J. POLY HOSE

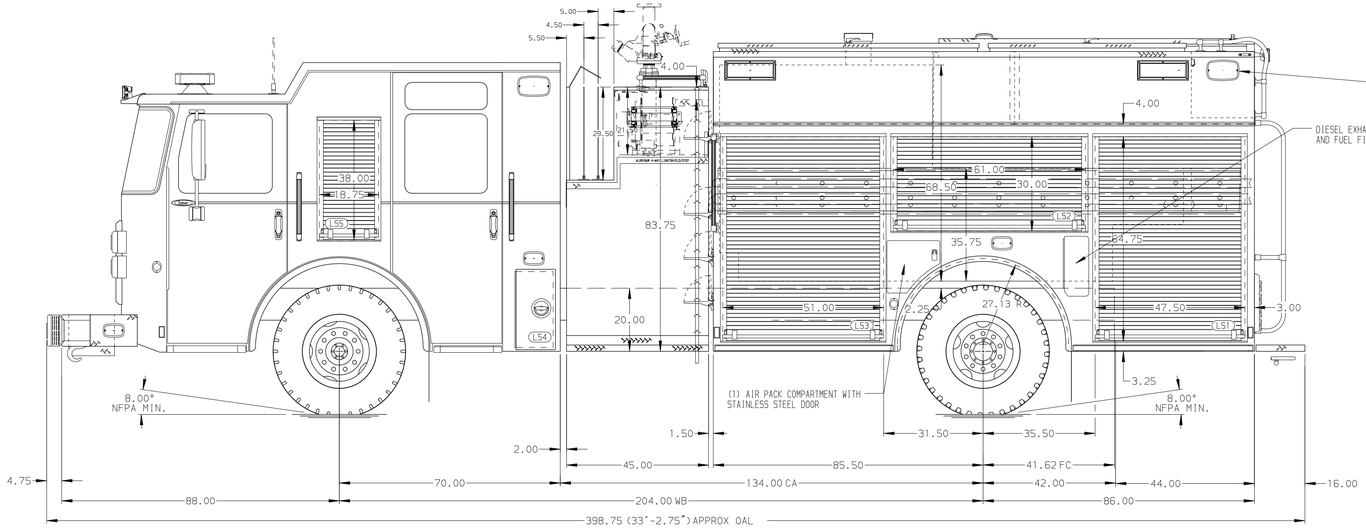

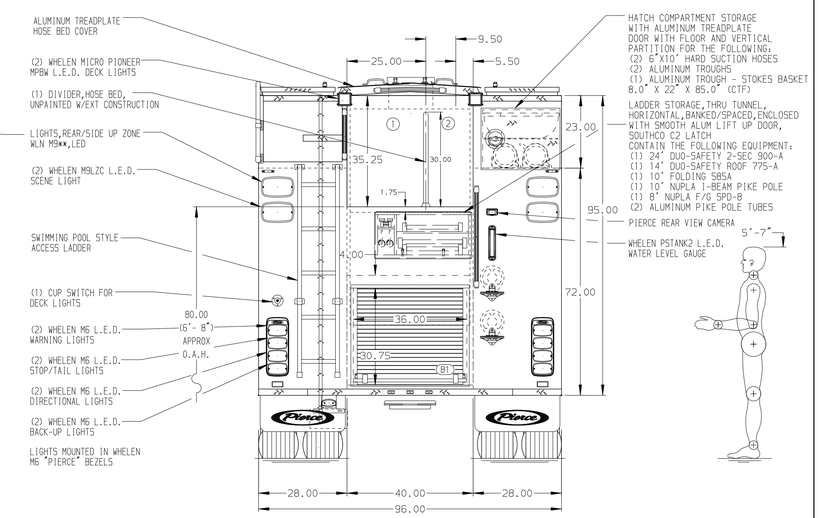

ALUMINUM BODY

NOTE

DIMENSIONS SHOWN ARE APPROXIMATE AND ARE SUBJECT TO MINOR DEVIATIONS AS MAY OCCUR OR BE NECESSARY IN CONSTRUCTION.
MINOR DETAILS NOT SHOWN.

REV	DATE	BY	CH
7	30JUL21	JAF	AJA
6	26JUL21	JAF	AJA
5	15JUN21	JLA	AJA
4	23APR21	JUS	EGO

CHASSIS DATA — MAKE: PIERCE — MODEL: SABER FR

Pierce MANUFACTURING INC.

TITLE: 1500-D-750P, 750 WATER TANK, 171" RESCUE PUMPER BODY (2) CROSSLAYS, DELUGE RISER, (2) HARD SUCTION HOSE

FOR: LAKE ZURICH DEPARTMENT, LAKE ZURICH, ILLINOIS

DWG NO.: 36264AD

JOB NO.	36264
SCALE	1:24
DATE	
DRAWN BY	LME 08APR21
CHECKED BY	EGO 9APR21
SHEET SIZE	D
SHEET NO.	1 OF 1

View File Created 30-JUL-2021 09:14:57