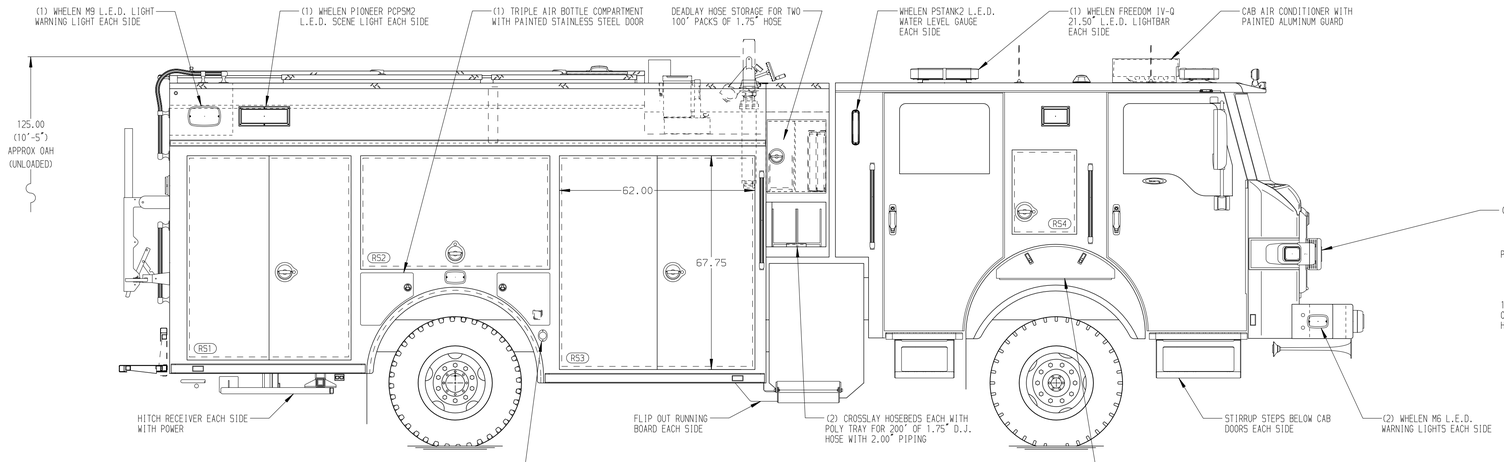

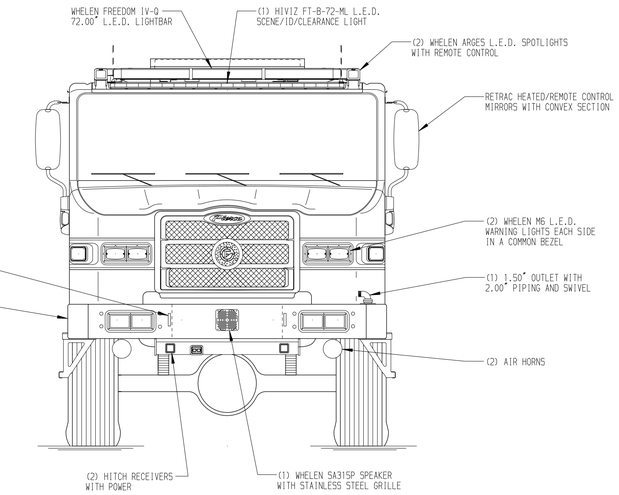

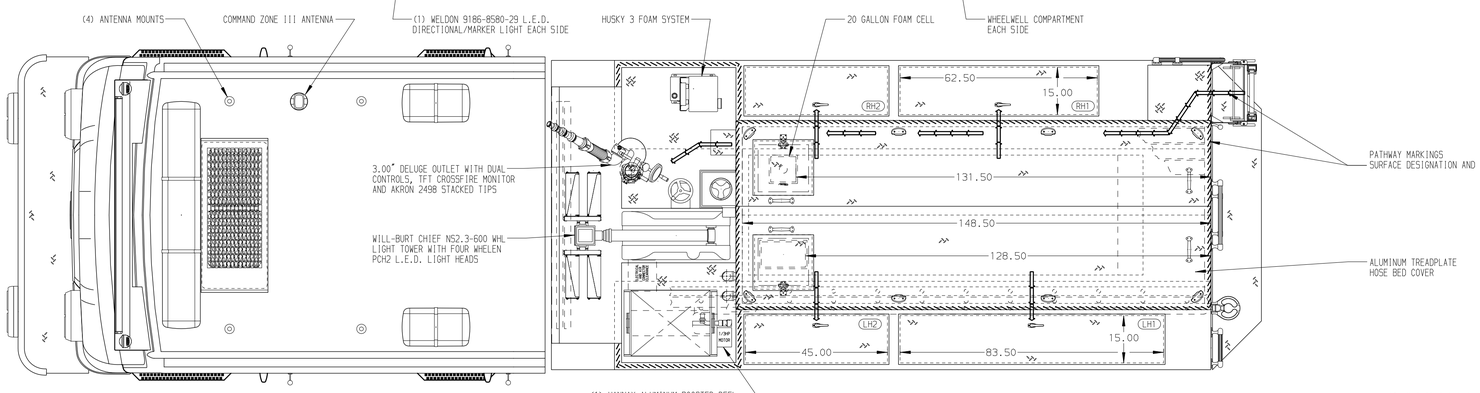

HOSEBED CAPACITIES

1. 300' OF 1.75" D.J. POLY HOSE (PRECONNECTED)
2. 300' OF 1.75" D.J. POLY HOSE (PRECONNECTED)
3. 600' OF 3.00" D.J. POLY HOSE
4. 1000' OF 5.00" D.J. POLY HOSE

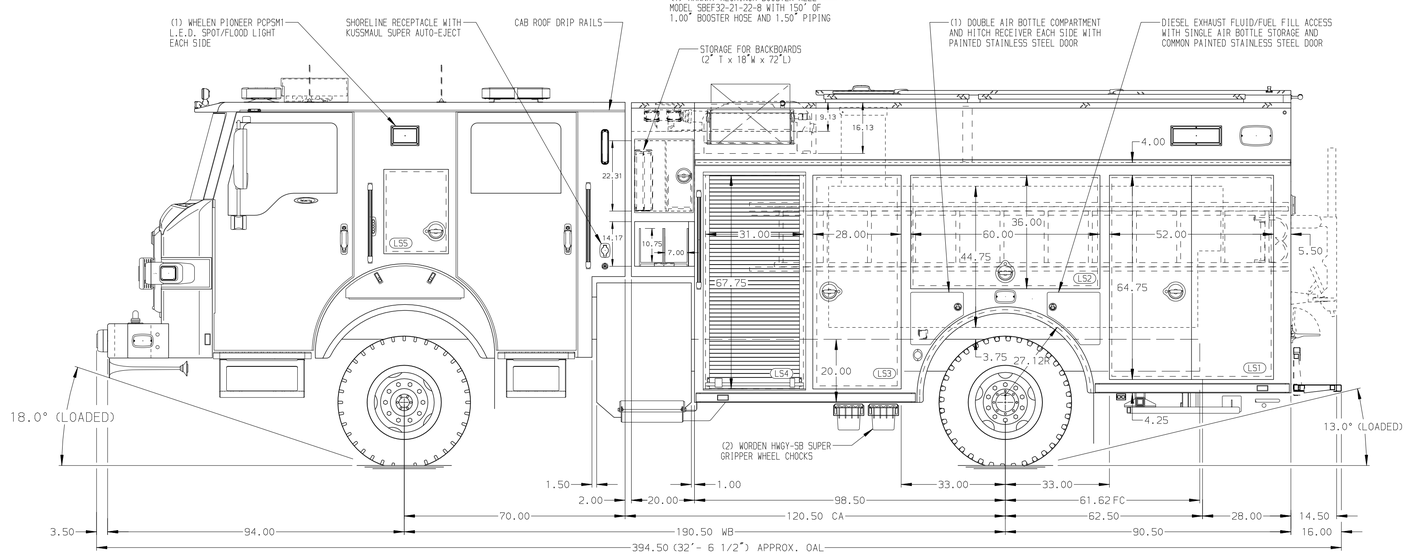

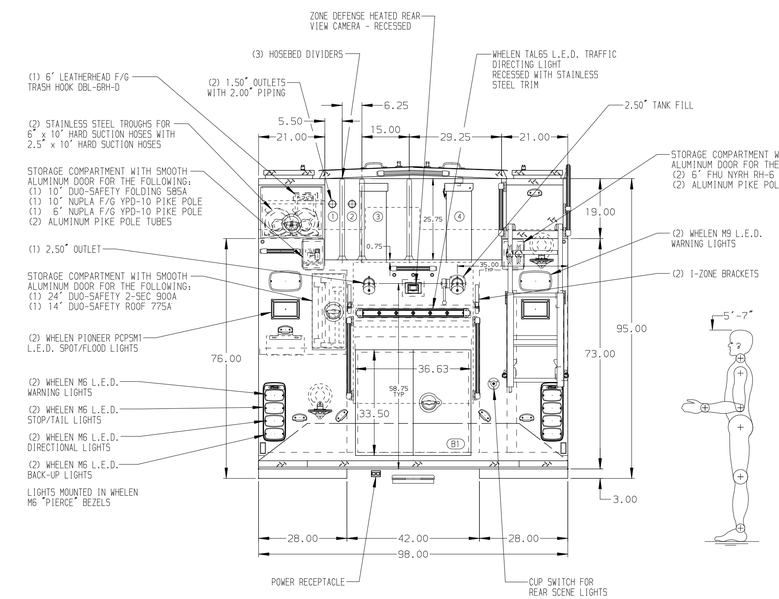

ALUMINUM BODY

SIDE ROLL AND FRONTAL IMPACT PROTECTION

NOTE

DIMENSIONS SHOWN ARE APPROXIMATE AND ARE SUBJECT TO MINOR DEVIATIONS AS MAY OCCUR OR BE NECESSARY IN CONSTRUCTION.
MINOR DETAILS NOT SHOWN.

1. BATTERY CHARGER LOCATED BEHIND DRIVER'S SEAT
2. BATTERY CHARGE INDICATOR LOCATED NEAR DRIVER'S SEAT RISER WITH BRACKET
3. RECESSED AIR INLET WITH KUSSMAUL AIR EJECT LEFT SIDE OF CREW CAB
4. DUAL L.E.D. LIGHT STRIPS LOCATED IN HOSE BED
5. REVERSE HINGE DOOR ON COMPARTMENT LS3

REV	DATE	BY	CH
5	22OCT21	JRO	AZA
4	13OCT21	JRO	NPE
3	20JUL21	JRO	NPW
2	15JUL21	JRO	NPE
1	23APR21	JRO	CZA

CHASSIS DATA
MAKE PIERCE
MODEL VELOCITY FR

Pierce MANUFACTURING INC.

TITLE: 1500-730 WATER/20 FOAM, 189" PUC RESCUE, HATCHES LADDERS THRU BODY, CROSSLAYS, DELUGE, FOAM SYSTEM

FOR: EBBETTS PASS FIRE DISTRICT
ARNOLD, CALIFORNIA

DWG NO. 36268AD-SH1

JOB NO.	36268
SCALE 1:24	DATE
DRAWN BY JRO	21APR21
CHECKED BY NPE	21APR21
SHEET SIZE D	SHEET NO. 1 OF 2

View File Created 22-OCT-2021 07:15:30