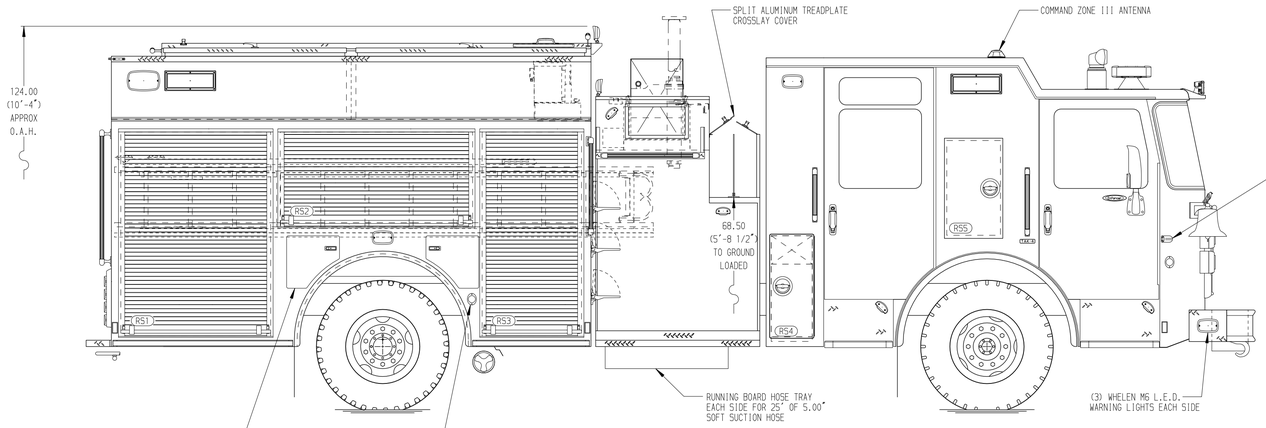

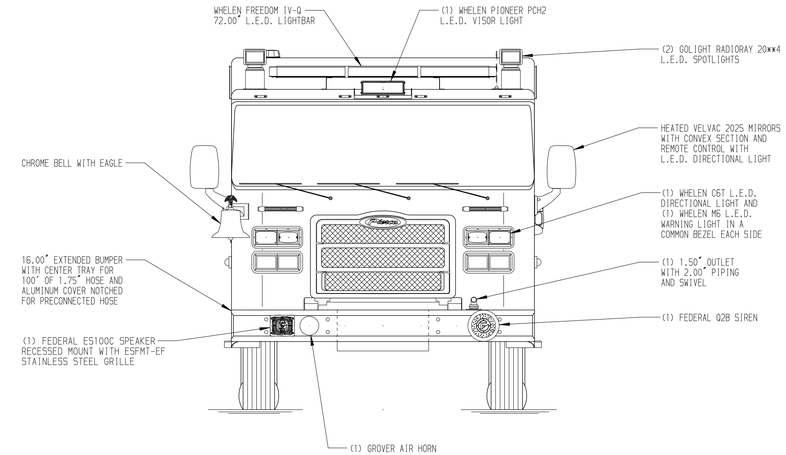

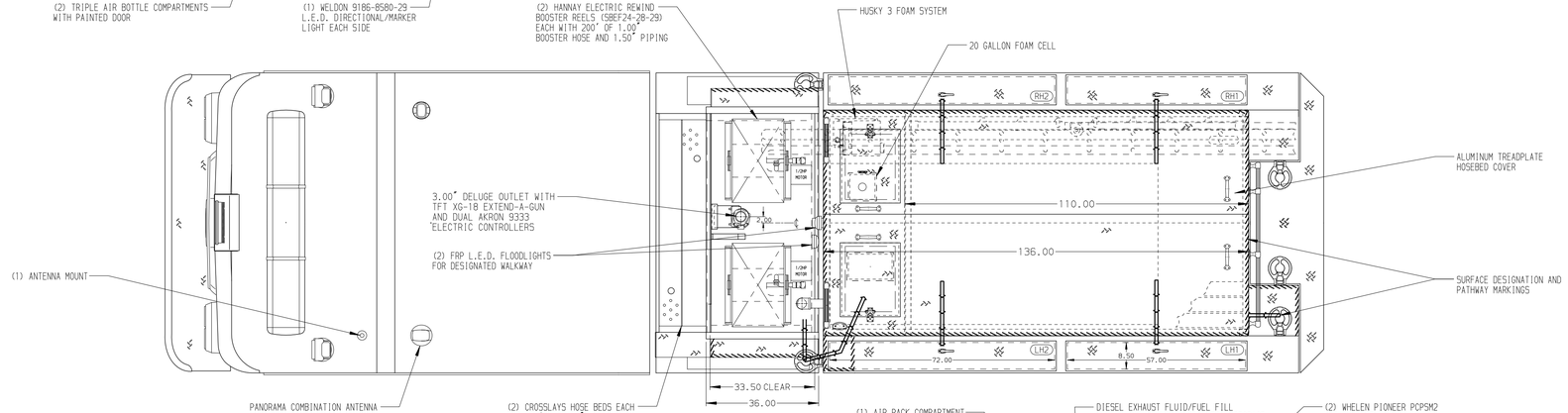

HOSEBED CAPACITIES

1. 200' OF 1.75" D.J. POLY HOSE
2. 200' OF 2.50" D.J. POLY HOSE
3. 600' OF 5.00" D.J. POLY HOSE
4. 600' OF 2.50" D.J. POLY HOSE
5. 600' OF 2.50" D.J. POLY HOSE
6. LITTLE GIANT LADDER STORAGE

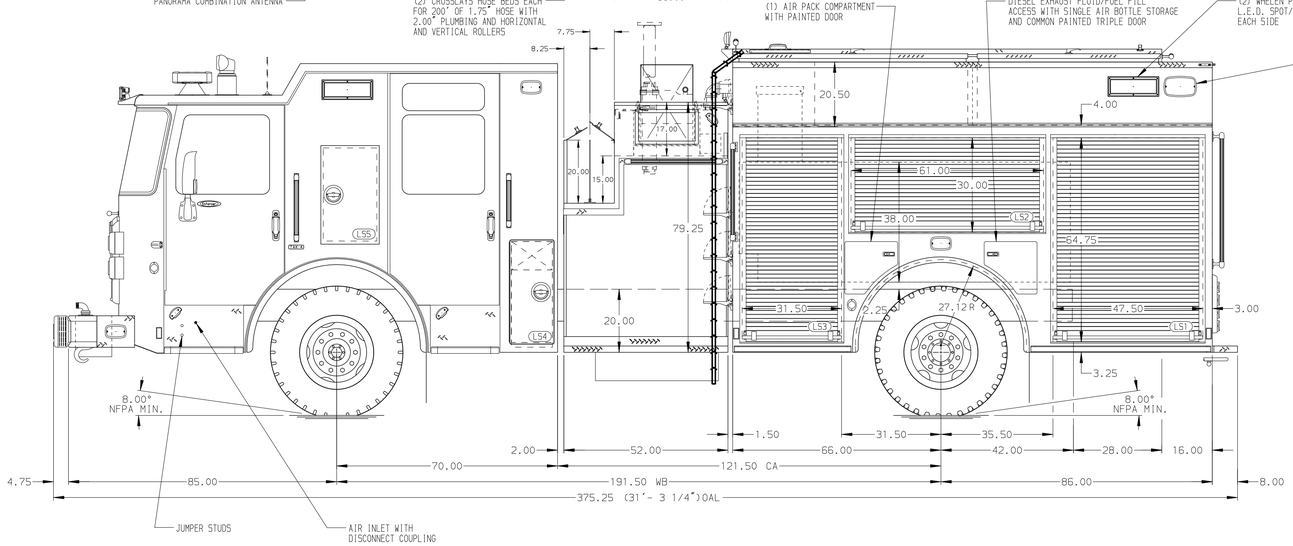

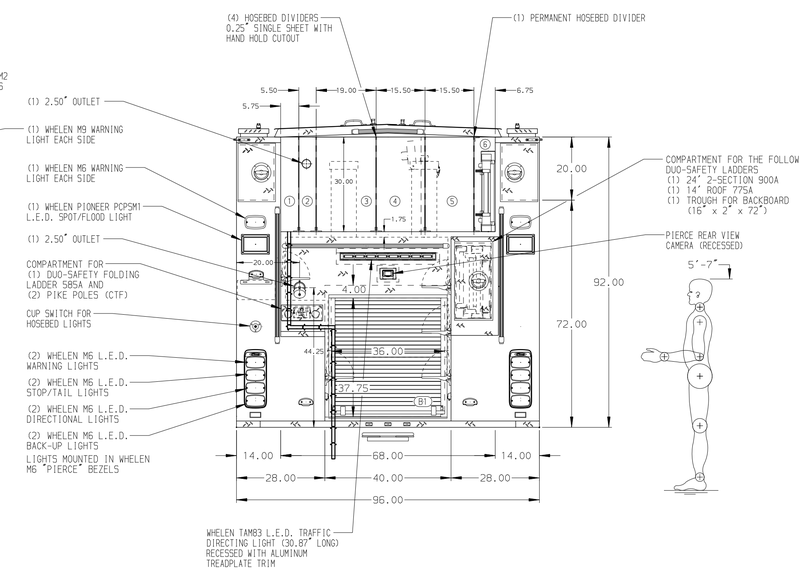

GALVANNEAL

SIDE ROLL AND FRONTAL IMPACT PROTECTION

NOTE

DIMENSIONS SHOWN ARE APPROXIMATE AND ARE SUBJECT TO MINOR DEVIATIONS AS MAY OCCUR OR BE NECESSARY IN CONSTRUCTION.
MINOR DETAILS NOT SHOWN.

1. AIR OUTLET WITH SHUT-OFF VALVE LOCATED LEFT SIDE PUMP PANEL
2. BATTERY CHARGER WITH COVER LOCATED IN COMPARTMENT LS3
3. BATTERY CHARGE INDICATOR LOCATED ON DRIVER'S SEAT RISER
4. DUAL L.E.D. LIGHT STRIPS LOCATED IN HOSE BED
5. ONE FULL WIDTH/DEPTH ADJUSTABLE SHELF IN COMPARTMENT LS2, RS2 & RS3; THREE IN LS1 & LS3; FOUR IN RS1
6. ONE FLOOR MOUNTED SLIDE-OUT TRAY IN COMPARTMENT LS3, RS1, & B1
7. SHORELINE RECEPTACLE KUSSMAUL SUPER AUTO-EJECT LOCATED ON LEFT SIDE PUMP PANEL
8. ATKINSON DYNAMICS ADSF-25-Z SPEAKER LOCATED ON LEFT SIDE PUMP PANEL
9. DRIP PAN GUARD FOR ROLL-UP DOOR IN EACH BODY COMPARTMENT

REV	DATE	BY	CH
B	28SEP21	JRO	PJP
A	01SEP21	JRO	PJP

CHASSIS DATA: MAKE PIERCE; MODEL ENFORCER

TITLE: 1500-630 WATER/20 FOAM, 152"BODY FDLER, SIDE CONTROL CROSSLAYS, LADDERS BTWN TANK/SIDESHT, BOOSTER REELS

FOR: LODI FIRE DEPARTMENT, LODI, CALIFORNIA

DWG NO.: 36314AD

Pierce MANUFACTURING INC.

JOB NO.	36314
SCALE	1:24
DATE	
DRAWN BY	JRO 15JUN21
CHECKED BY	EGO 16JUN21
SHEET SIZE	D
SHEET NO.	1 OF 1

View File Created 29-SEP-2021 07:42:34