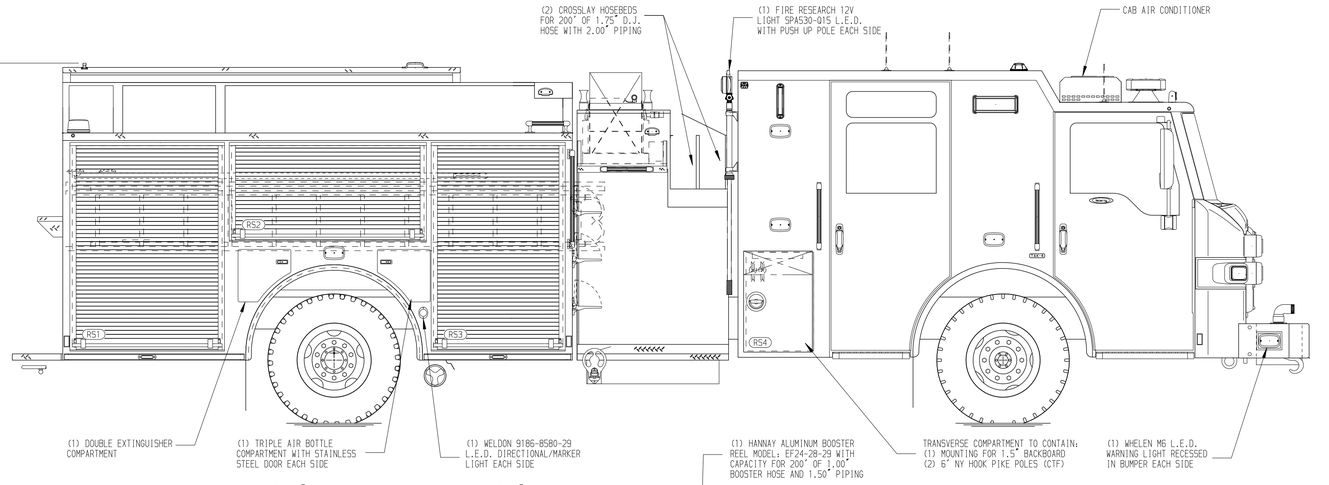


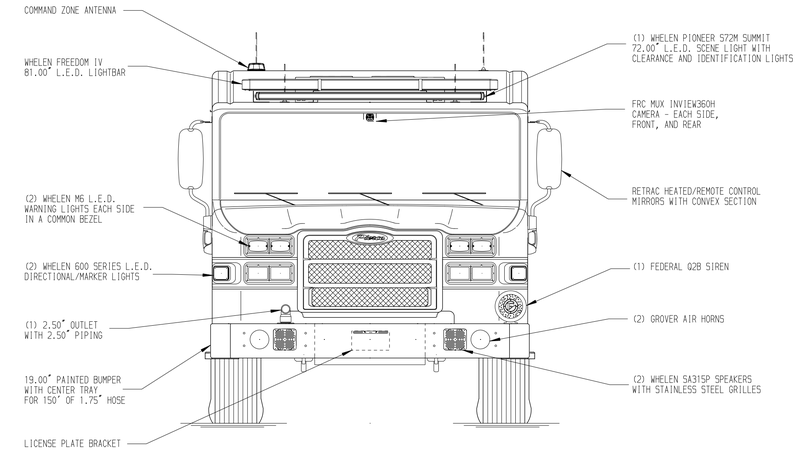


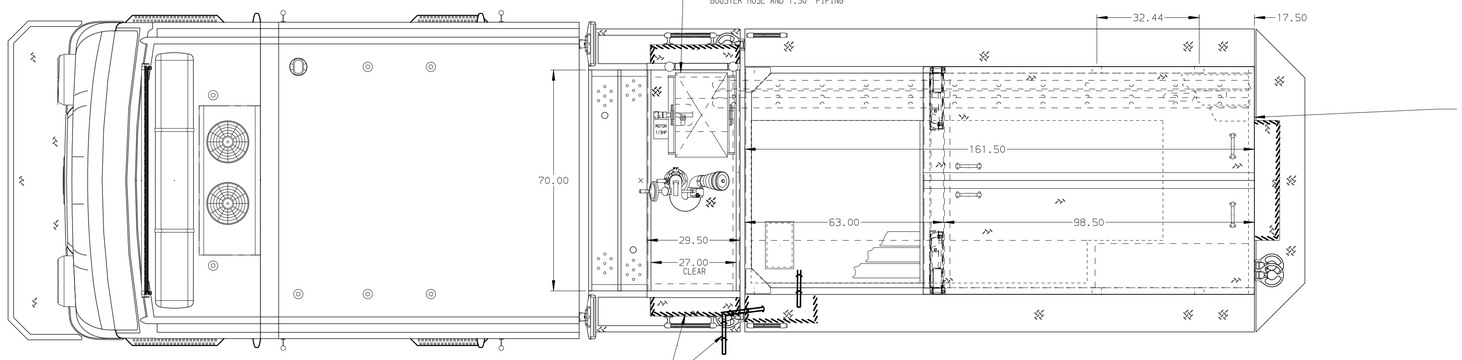


HOSEBED CAPACITIES
1 - 1000' OF 5.00" D.J. POLY HOSE
2 - 400' OF 3.00" D.J. POLY HOSE
3 - 200' OF 2.50" D.J. POLY HOSE

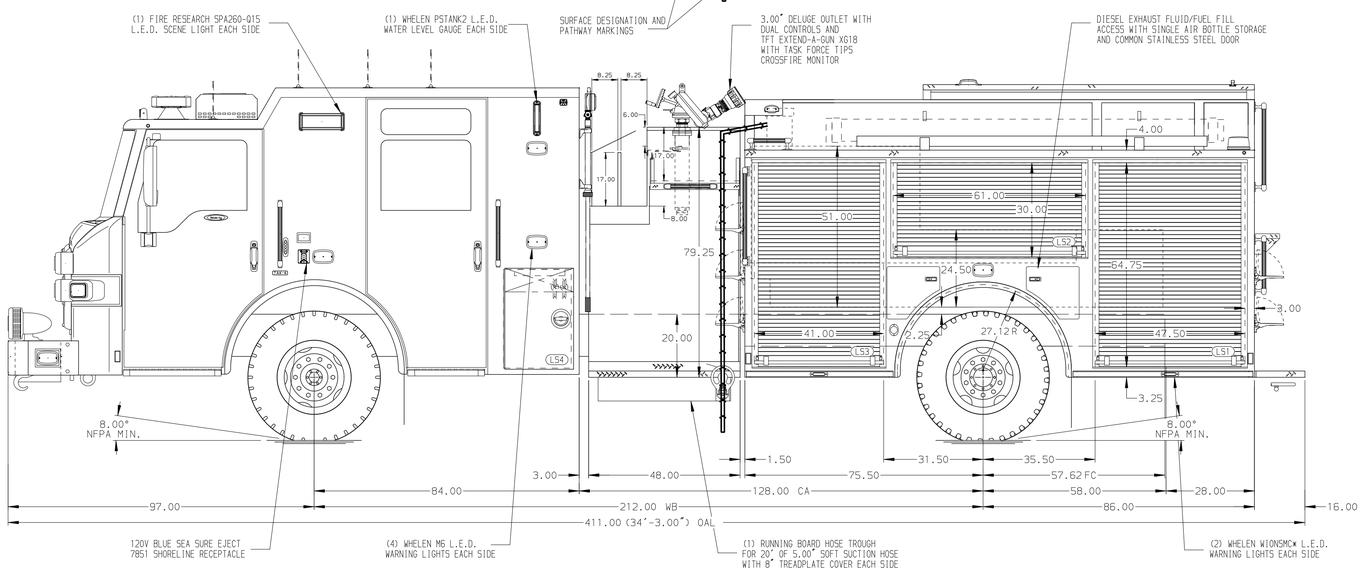


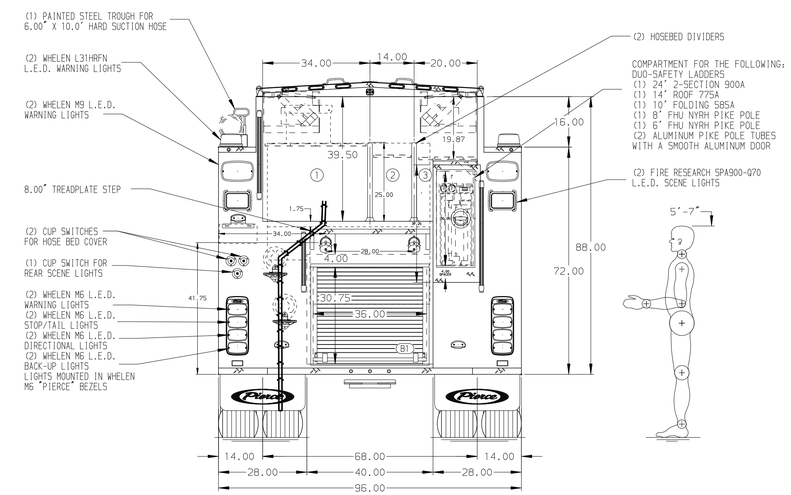


ALUMINUM BODY

SIDE ROLL & FRONTAL IMPACT PROTECTION

NOTE

DIMENSIONS SHOWN ARE APPROXIMATE AND ARE SUBJECT TO MINOR DEVIATIONS AS MAY OCCUR OR BE NECESSARY IN CONSTRUCTION.
MINOR DETAILS NOT SHOWN.

1. SIX PULL STRAPS FOR DOORS PER SHOP ORDER
2. SIX FULL WIDTH/DEPTH ADJUSTABLE SHELF PER SHOP ORDER
3. ONE ADJUSTABLE SLIDE-OUT TRAY PER SHOP ORDER
4. THREE FLOOR MOUNTED SLIDE-OUT TRAY PER SHOP ORDER
5. ONE SWING-OUT TOOL BOARD WITH PEGBOARD PATTERN PER SHOP ORDER
6. PARTITION BETWEEN COMPARTMENTS LS1/B1 AND RS1/B1
7. AIR INLET WITH DISCONNECT COUPLING LOCATED PER SHOP ORDER
8. BATTERY CHARGER LOCATED PER SHOP ORDER
9. WHEEL CHOCKS AND MOOUNTING BRACKETS PROVIDED BY FIRE DEPARTMENT

| REV | DATE | BY | CH |
|---|---|---|---|
| 2 | 26OCT21 | JJB | COS |
| 1 | 17SEP21 | JJB | CHR |

CHASSIS DATA
MAKE: PIERCE
MODEL: VELOCITY

Pierce MANUFACTURING INC.

TITLE: 1500-D-750P, 750 GALLON WATERTANK, 161" FDLER BODY LADDERS BTWN TANK & SS, (2) CROSSLAYS, DELUGE
FOR: HARRIS COUNTY ESD #7 (SPRING FIRE DEPARTMENT) SPRING, TEXAS
DWG NO.: 36324AD

| JOB NO. | SCALE | DRAWN BY | CHECKED BY | SHEET SIZE | SHEET NO. |
|---|---|---|---|---|---|
| 36324 | 1:24 | JJB | WKL | D | 1 OF 1 |

DATE: 07JUL21 / 7JUL21

View File Created 27-OCT-2021 10:18:23