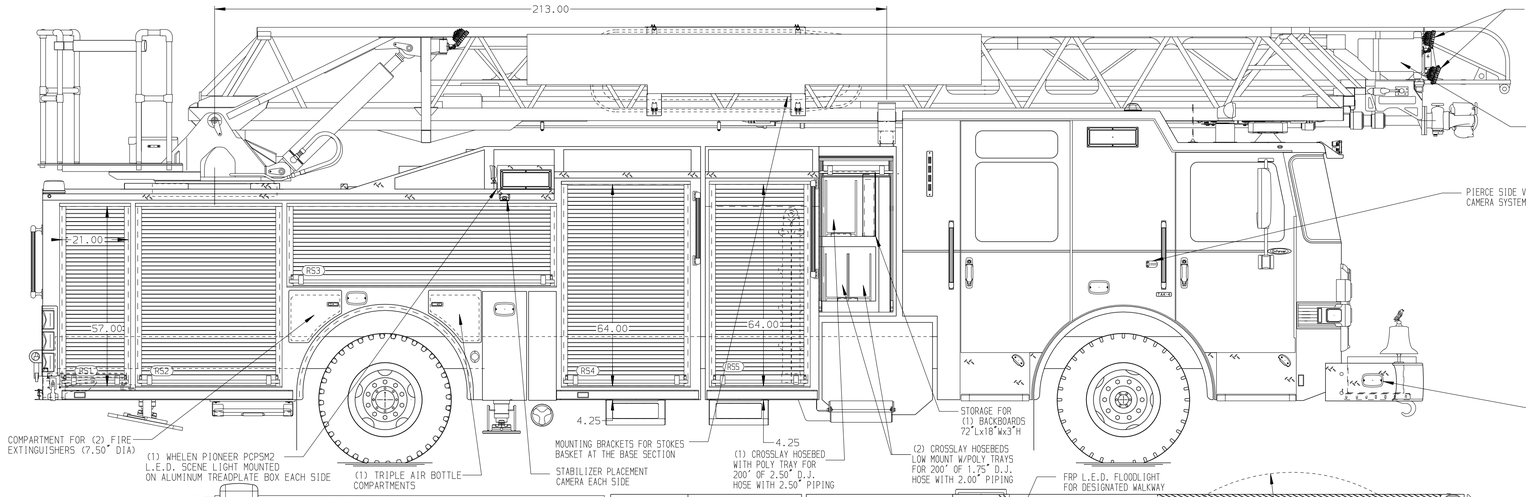

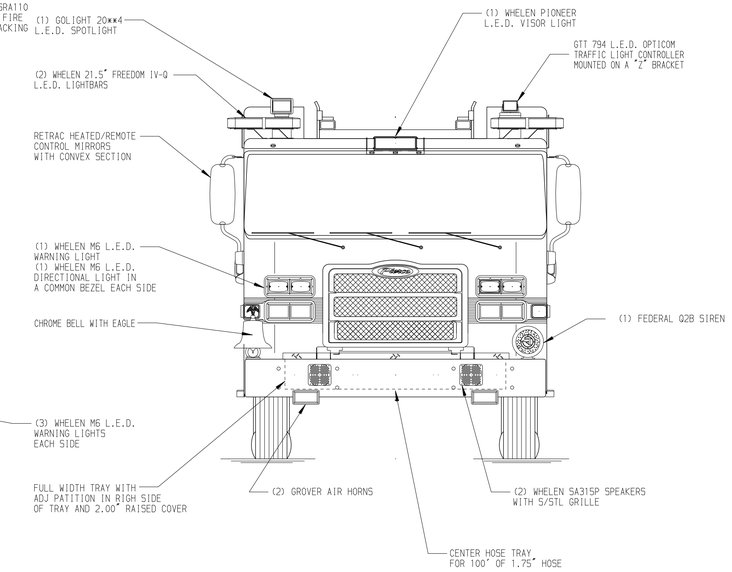

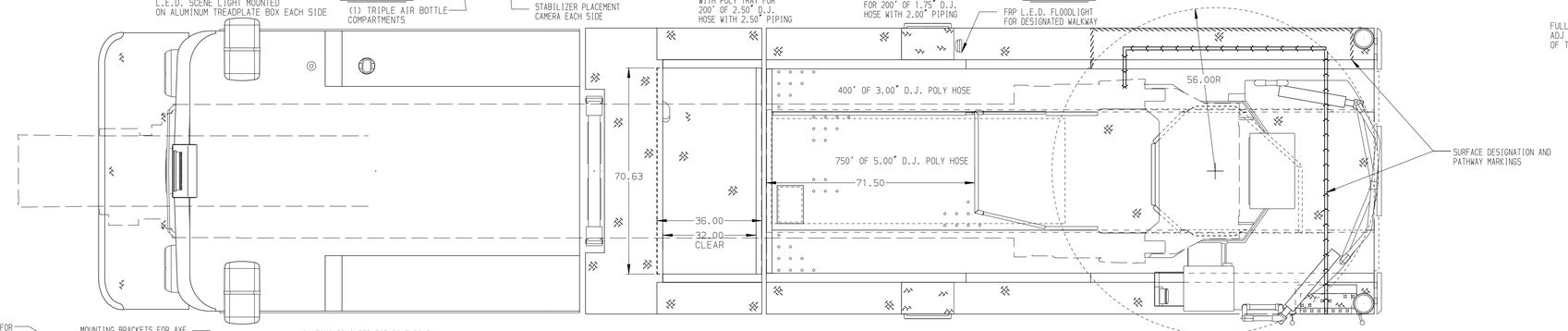

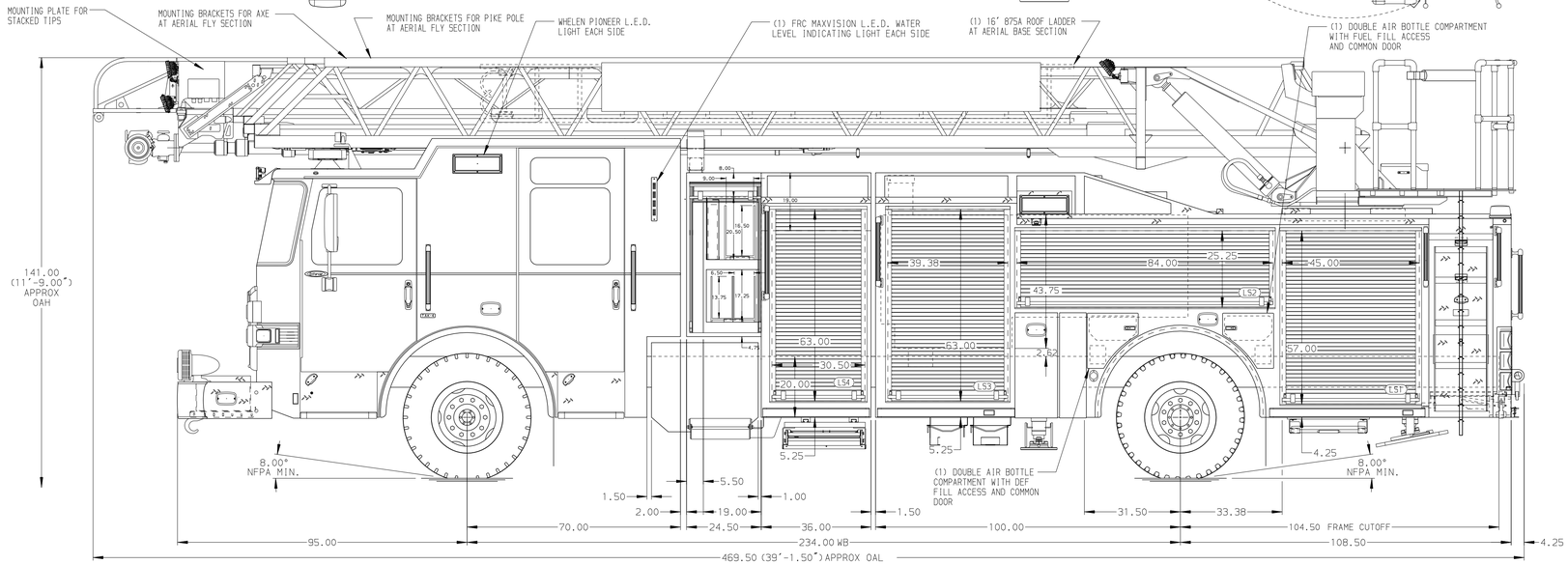

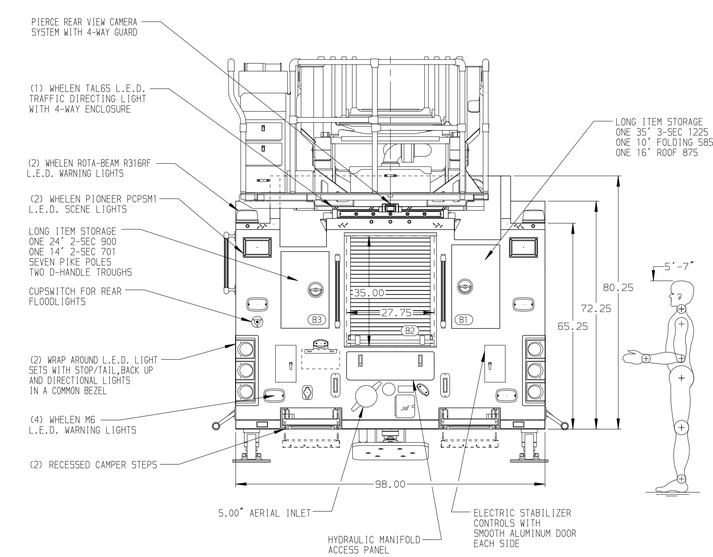

ALUMINUM BODY

NOTE

DIMENSIONS SHOWN ARE APPROXIMATE AND ARE SUBJECT TO MINOR DEVIATIONS AS MAY OCCUR OR BE NECESSARY IN CONSTRUCTION.
MINOR DETAILS NOT SHOWN.

1. ONE 1.50 OUTLET WITH 2.00 PIPING AND SWIVEL LOCATED IN CENTER BUMPER TRAY
2. SHORELINE RECEPTACLE WITH KUSSMAUL SUPER AUTO-EJECT LOCATED ON DRIVER SIDE REAR BULKHEAD
3. AIR INLET WITH DISCONNECT COUPLING IN THE DRIVER SIDE STEPWELL
4. BATTERY CHARGER LOCATED IN CAB PER SHOP ORDER
5. BATTERY CHARGE INDICATOR LOCATED ON THE DRIVER SIDE SEAT RISER
6. THIRTEEN ADJUSTABLE SHELVES IN COMPARTMENTS PER SHOP ORDER
7. THREE FLOOR MOUNTED SLIDE-OUT TRAYS IN COMPARTMENTS PER SHOP ORDER
8. NON-RAISED AERIAL PEDESTAL
9. LIFTING EYE ROPE RESCUE ATTACHMENT AT AERIAL TIP
10. 1500 GPM HIGH FLOW WATERWAY
11. ONE SWING-OUT TOOLBOARD IN COMPARTMENT PER SHOP ORDER
12. ONE CTECH (4) DRAWER ASSEMBLY IN COMPARTMENT PER SHOP ORDER
13. PEGBOARD ON BACK WALLS OF COMPARTMENTS PER SHOP ORDER
14. TWO VERTICAL PARTITIONS IN COMPARTMENTS PER SHOP ORDER
15. DC POWER TO AERIAL TIP
16. 2-WAY INTERCOM SYSTEM BETWEEN AERIAL TIP AND TURNTABLE
17. NO LIMITED RETRACTION
18. ONE 120V RECEPTACLE IN COMPARTMENT PER SHOP ORDER
19. TWO 120V RECEPTACLES IN CAB PER SHOP ORDER
20. RUNG LIGHTING ON AERIAL LADDER

REV	DATE	BY	CH
7	29NOV21	LWE	CHR
6	21OCT21	LWE	CHR

CHASSIS DATA	
MAKE	PIERCE
MODEL	ENFORCER

Pierce MANUFACTURING INC.

TITLE	107' ASCENDANT AERIAL LADDER AND BODY ASSEMBLY 500 GALLON WATER TANK
FOR	HURRICANE VALLEY FIRE SPEC. SERV. DISTRICT HURRICANE, UT
DWG NO.	36332AD

JOB NO.	36332
SCALE	1:24
DATE	
DRAWN BY	LWE 02AUG21
CHECKED BY	NDA 03AUG21
SHEET SIZE	D
SHEET NO.	1 OF 1

View File Created 29-NOV-2021 11:10:21