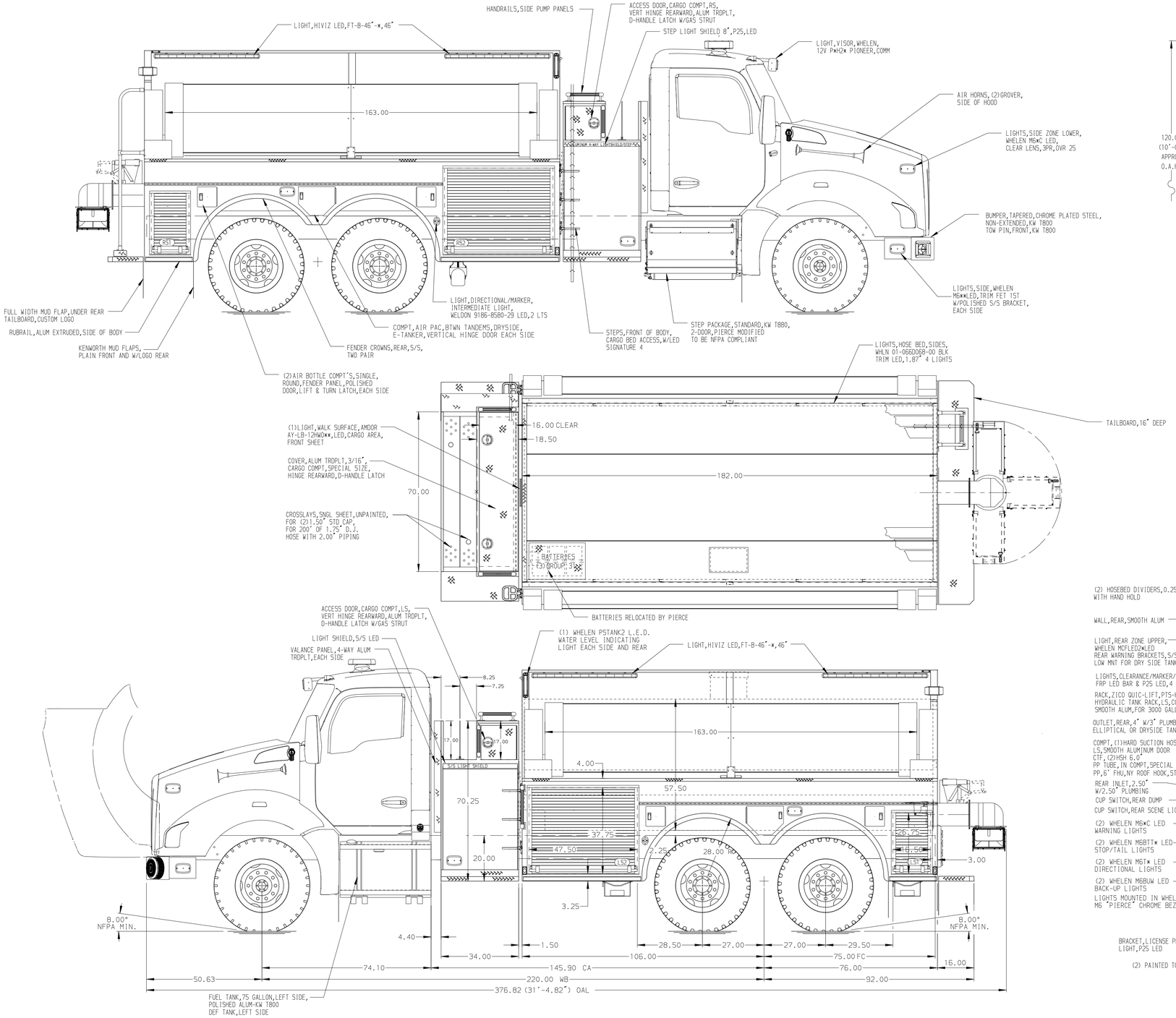

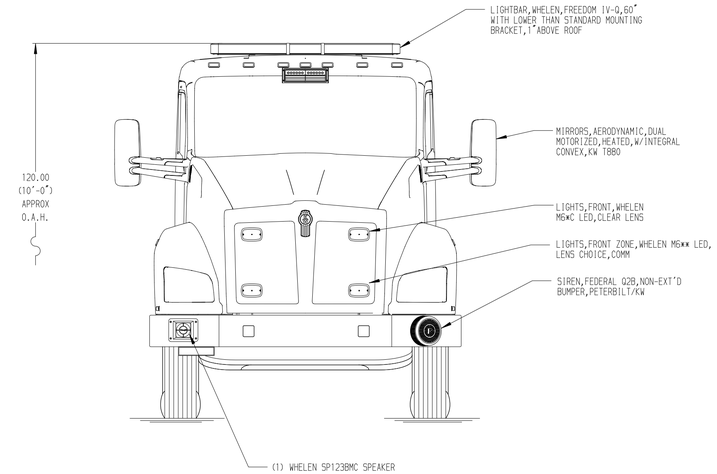

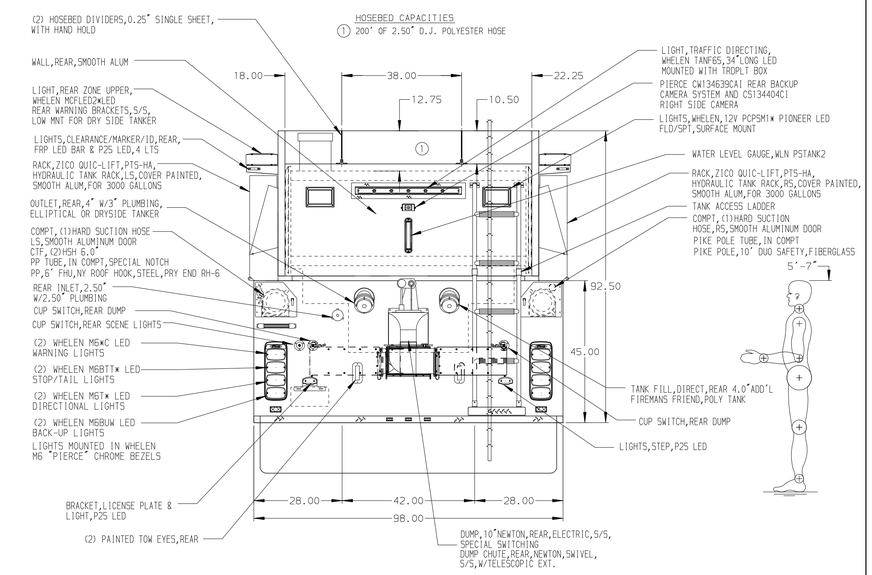

ALUMINUM BODY

MAXIMUM O.A.L. 31'-5"/ 377"

MAXIMUM O.A.H. 10'/ 120.00"

NOTE

DIMENSIONS SHOWN ARE APPROXIMATE AND ARE SUBJECT TO MINOR DEVIATIONS AS MAY OCCUR OR BE NECESSARY IN CONSTRUCTION.
MINOR DETAILS NOT SHOWN.

REV	DATE	BY	CH
7	14OCT21	RHU	NAS
6	27SEP21	JAF	NAS
5	22SEP21	JLA	NAS
4	13JUL21	JAF	RWI

CHASSIS DATA
MAKE: KW
MODEL: T880

Pierce MANUFACTURING INC.

TITLE: 1250-D-2500 GAL,182"DRYSIDE BODY
34"SIDE CONTROL,(2)CROSSLAYS

FOR: FRANKLIN COUNTY PUBLIC SAFETY
ROCKY MOUNT, VIRGINIA

DWG NO. 36355AD

JOB NO.	36355
SCALE 1:24	DATE
DRAWN BY JAF	28JUN21
CHECKED BY RWI	30JUN21
SHEET SIZE D	SHEET NO. 1 OF 1

View File Created 15-OCT-2021 07:03:48