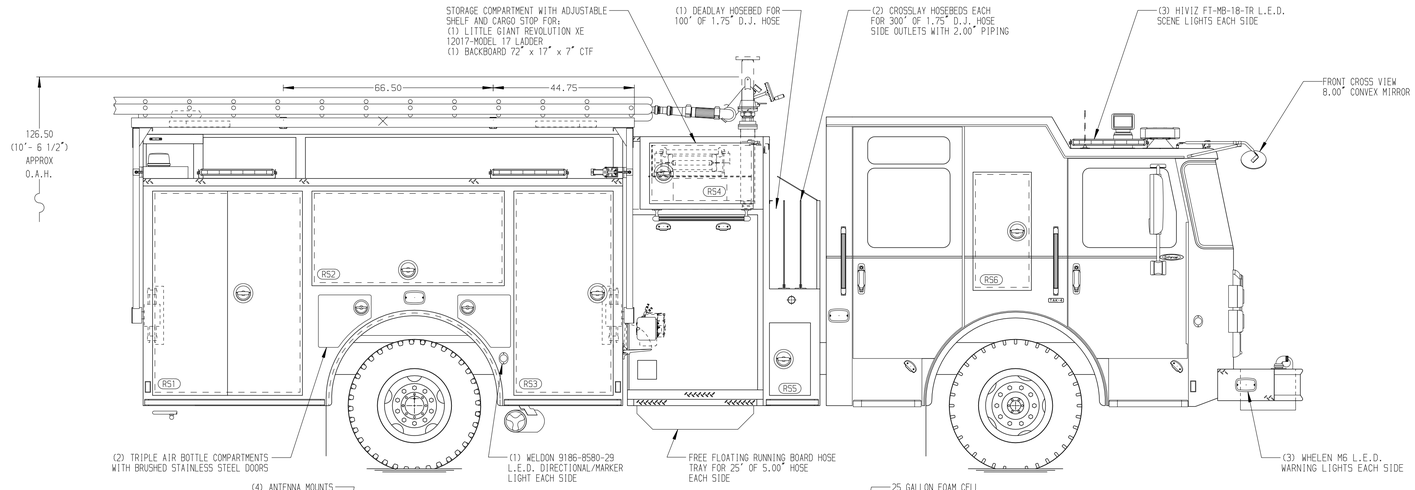

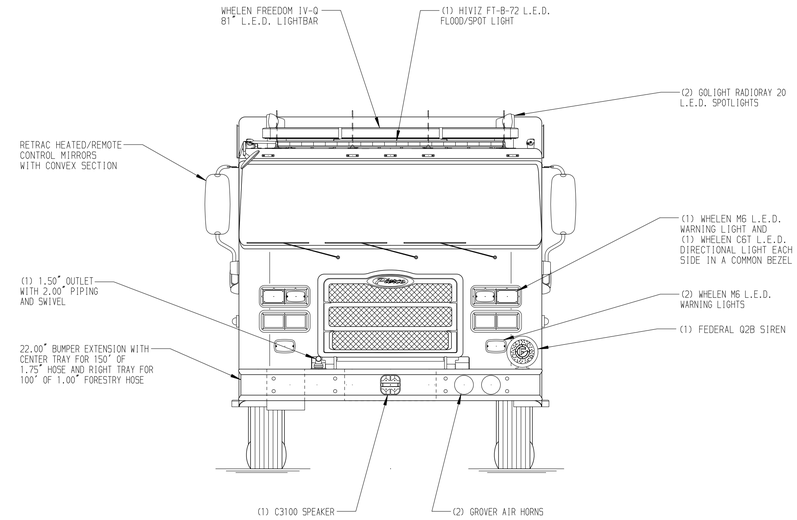

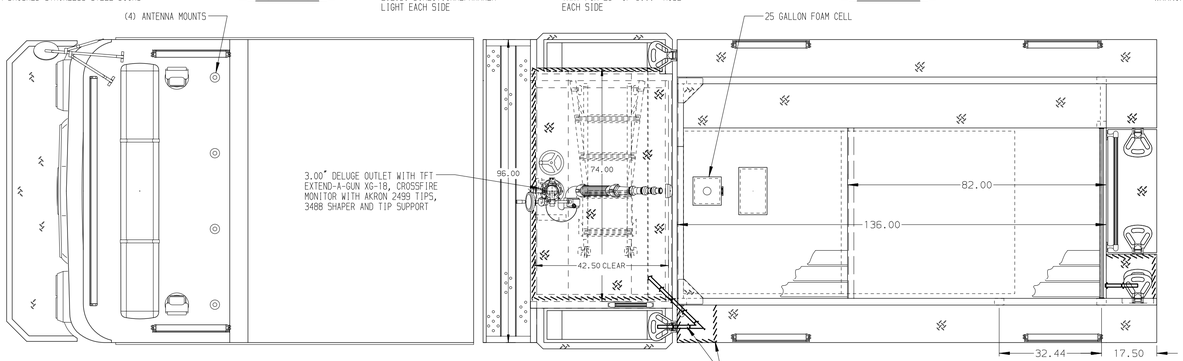

HOSEBED CAPACITIES

1. 600' OF 2.50" D.J.POLY HOSE
2. 200' OF 3.00" D.J.POLY HOSE
3. 850' OF 5.00" D.J.POLY HOSE

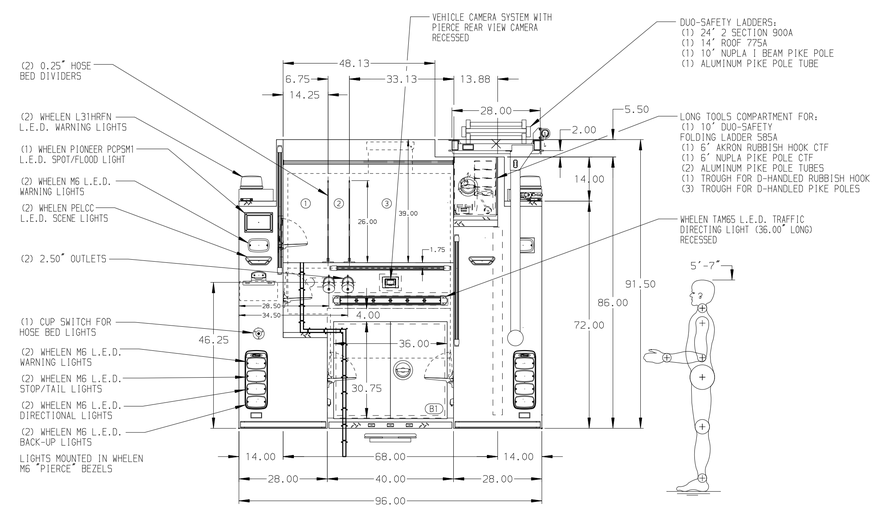

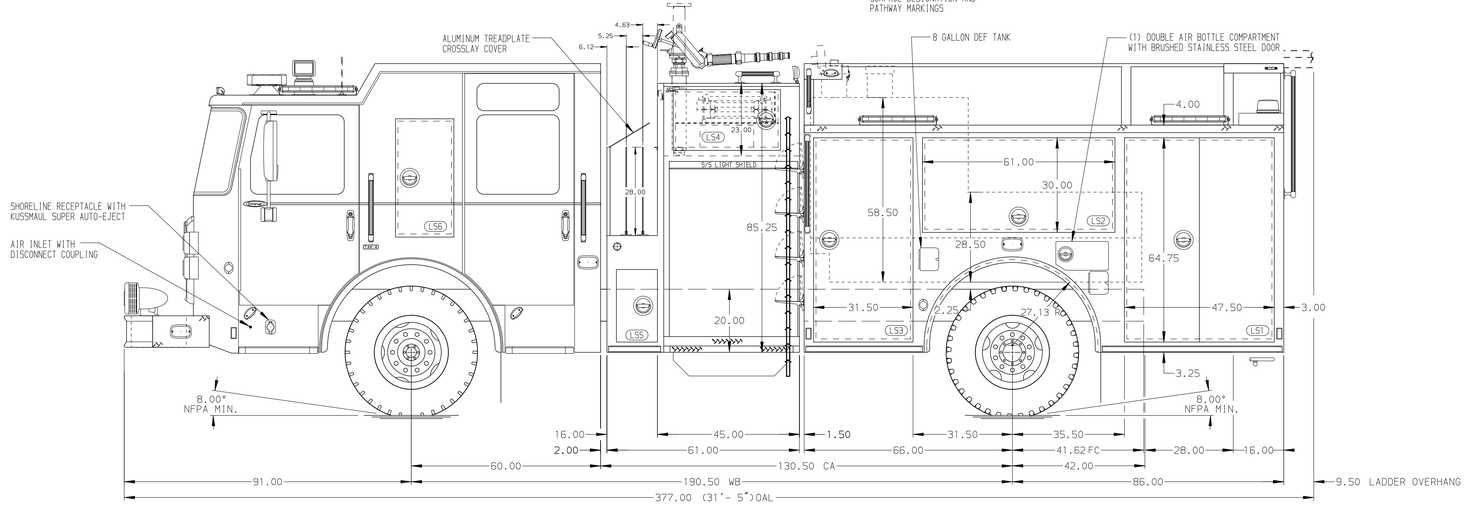

ALUMINUM BODY

NOTE

DIMENSIONS SHOWN ARE APPROXIMATE AND ARE SUBJECT TO MINOR DEVIATIONS AS MAY OCCUR OR BE NECESSARY IN CONSTRUCTION.
MINOR DETAILS NOT SHOWN.

1. BATTERY CHARGER LOCATED BEHIND THE DRIVER'S SEAT
2. BATTERY CHARGE INDICATOR LOCATED ON DRIVER'S SEAT RISER
3. DUAL L.E.D. LIGHT STRIPS LOCATED IN HOSE BED
4. STAINLESS STEEL SCUFFPLATE ON FRONT AND REAR BODY CORNERS
5. REVERSED HINGED DOOR ON COMPARTMENTS LS3 AND RS3
6. TWELVE FULL WIDTH/DEPTH ADJUSTABLE SHELVES - TWO IN COMPARTMENTS LS1 AND LS3, THREE IN RS3, AND FIVE IN RS1
7. ONE ADJUSTABLE SLIDE-OUT TRAY IN COMPARTMENT LS3
8. ONE 200 LB. FLOOR MOUNTED SLIDE-OUT TRAY WITH SIDE SLIDES IN COMPARTMENT RS1
9. ONE SWING-OUT ALUMINUM TOOL BOARD IN COMPARTMENT LS2
10. ONE SLIDE-OUT ALUMINUM TOOL BOARD IN COMPARTMENT RS1
11. ONE VERTICAL DIVIDER IN COMPARTMENTS RS1 AND RS2
12. STORAGE RACK FOR THREE EXTINGUISHERS IN COMPARTMENT LS3
13. ONE FIXED SHELF IN COMPARTMENT RS1
14. ONE ADJUSTABLE SHELF WITH SPECIAL SIDE HEIGHTS IN COMPARTMENT LS5
15. ONE ADJUSTABLE TILTING/SLIDE-OUT TRAY IN COMPARTMENT RS2
16. ONE 500 LB. FLOOR MOUNTED SLIDE-OUT TRAY IN COMPARTMENT RS1
17. ONE 120V DUPLEX RECEPTACLE IN COMPARTMENT LS1
18. TWO WORDEN HWGY-SB SUPER GRIPPER WHEEL CHOCKS
19. FOAM PRO 2002 FOAM SYSTEM
20. ONE 500 LB. FIXED FULL WIDTH/DEPTH INVERTED SHELF IN COMPARTMENT LS1
21. ONE 500 LB. FULL WIDTH/DEPTH FLOOR MOUNTED SLIDE-OUT TRAY IN COMPARTMENT RS3
22. ONE TOOLBOARD TRAY IN COMPARTMENT RS1
23. ONE ALUMINUM MOUNTING PLATE IN COMPARTMENTS LS2 AND RS2
24. ALUMINUM ANGLE ON FLOOR AND SHELF IN COMPARTMENT LS5
25. ONE POLY TOOL BOX IN COMPARTMENT RS1

REV	DATE	BY	CH
1	16NOV21	JRO	GKH
0	18OCT21	JRO	PJP

CHASSIS DATA
MAKE: PIERCE
MODEL: ENFORCER

Pierce MANUFACTURING INC.

TITLE: 1500-725 WATER/25 FOAM, 152" BODY, SIDE CONTROL CROSSLAYS, DEADLAY, DELUGE, LADDER RACK
FOR: CLARK FIRE AND RESCUE, RIDGEFIELD, WASHINGTON
DWG NO.: 36357AD

JOB NO.	SCALE	DRAWN BY	CHECKED BY	SHEET SIZE	SHEET NO.
36357 -01, -02	1:24	JRO	CZA	D	1 OF 1
	DATE	22JUL21	27JUL21		

View File Created 22-NOV-2021 07:49:17