RIGHT SIDE COMPARTMENTS CONTAIN THE FOLLOWING:

COMPARTMENT RS1 CONTAINS:
- (1) STD DEPTH ADJ SLIDE OUT/TILT TRAY
- (1) FLOOR MOUNTED TRAY W/SIDE SLIDES WITH 2 TOOLBOARDS
-
-
-
-

COMPARTMENT RS2 CONTAINS:
- (1) STD DEPTH ADJ SLIDE OUT/TILT TRAY
-
-
-

COMPARTMENT RS3 CONTAINS:
- (1) STD DEPTH ADJ SHELF
- (1) STD DEPTH ADJ SLIDE OUT/TILT TRAY
-
-
-
-
-

COMPARTMENT RS4 CONTAINS:
- (1) CAB LIFT CONTROLLER
- (1) 5-DRAWER C-TECH CABINET
- (4) FLOOR MOUNTED TRAYS WITH TOOLBOARDS
-
-
-
-
-

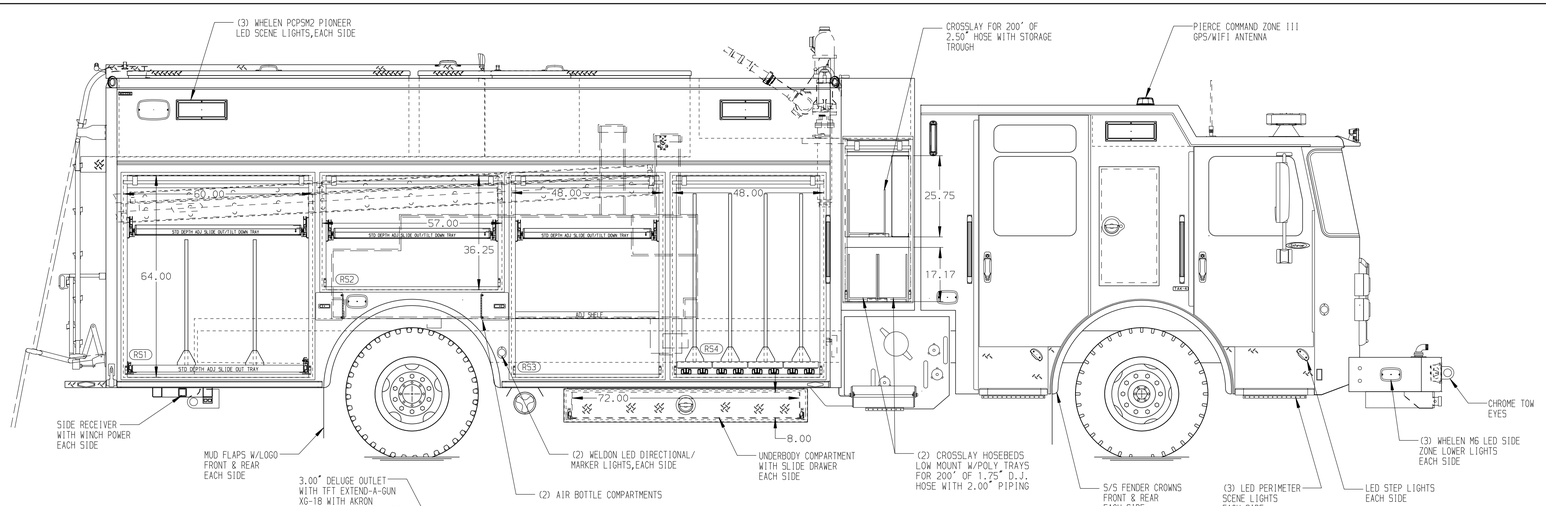

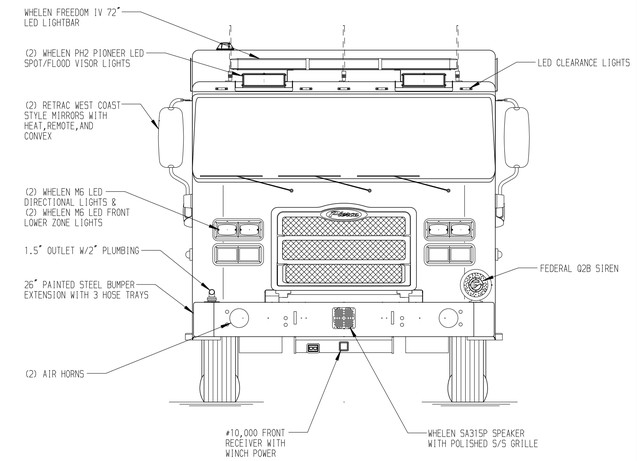

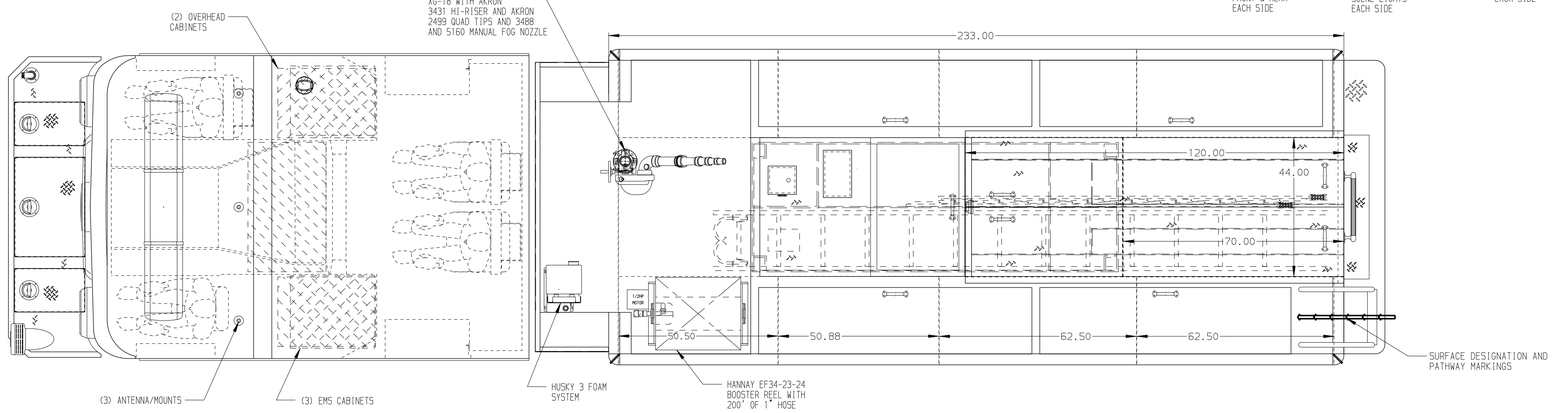

REAR COMPARTMENT CONTAINS THE FOLLOWING:

COMPARTMENT B1 CONTAINS:
- (1) RACK FOR THE FOLLOWING
  - (1) 24' 2-SECTION LADDER
  - (1) 14' ROOF LADDER
  - (1) 10' FOLDING LADDER
  - (1) STOKES BASKET
  - (3) PIKE POLES
  - (1) MISCELLANEOUS STORAGE TROUGH
- 2" LIP ON TOP OF FRAME AREA
-
-
-
-
-

HOSEBED CAPACITY
- (A) - 300' OF 4.00" HOSE
- (B) - 300' OF 1.75" HOSE
- (C) - 200' OF 1.75" HOSE AND 100' OF 2.5" HOSE
- (D) - 300' OF 4.00" HOSE

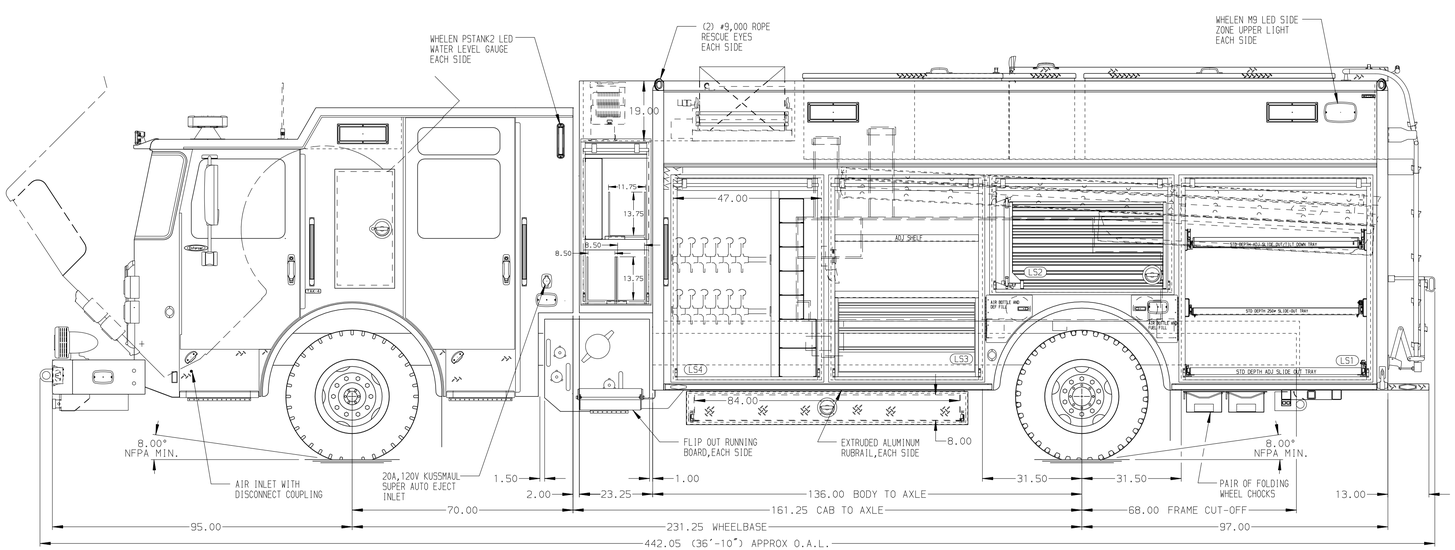

LEFT SIDE COMPARTMENTS CONTAIN THE FOLLOWING:

COMPARTMENT LS1 CONTAINS:
- (1) STD DEPTH ADJ SLIDE OUT TRAY
- (1) STD DEPTH ADJ SLIDE OUT/TILT TRAY
- (1) FLOOR MOUNTED TRAY W/SIDE SLIDES
-
-
-
-
-

COMPARTMENT LS2 CONTAINS:
- (1) SWING OUT TOOLBOARD WITH PAC TRAC
-
-
-

COMPARTMENT LS3 CONTAINS:
- (1) 4-DRAWER C-TECH CABINET
- (1) STD DEPTH ADJ SHELF
- 2" LIP ON TOP OF C-TECH CABINET
-
-
-
-
-

COMPARTMENT LS4 CONTAINS:
- (1) 10TA 75A BATTERY CHARGER
- (1) RACK FOR 2 EXTINGUISHERS
- (1) RACK FOR 5 SCBA BOTTLES
-
-
-
-
-
-

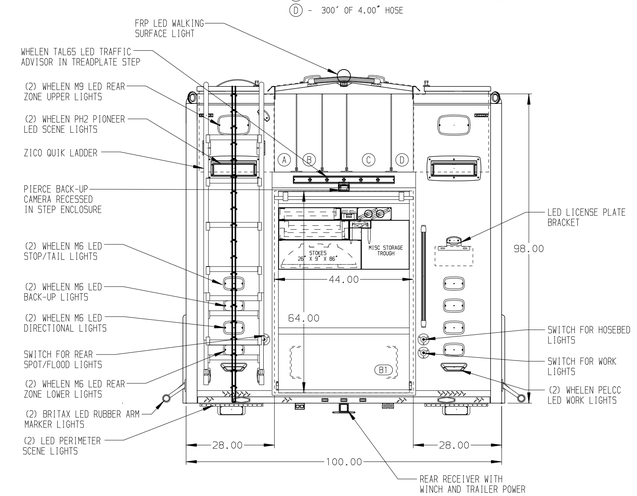

NOTE

DIMENSIONS SHOWN ARE APPROXIMATE AND ARE SUBJECT TO MINOR DEVIATIONS AS MAY OCCUR OR BE NECESSARY IN CONSTRUCTION.
MINOR DETAILS NOT SHOWN.

NOTES:
1. PIERCE 1500 GPM SINGLE STAGE PUC PUMP
2. POLISHED S/S SCUFFPLATES ON CAB AND CREW CAB DOORS
3. FLOOR IN CAB AND CREW CAB TO BE PADDED RUBBER
4. DAVID CLARK INTERCOM SYSTEM LOCATED IN CAB AND CREW CAB
5. BATTERY CHARGE INDICATOR LOCATED ON THE DRIVER'S SEAT RISER
6. PIERCE DUAL LED STRIP LIGHTS IN HOSEBED
7. PIERCE DUAL LED LIGHTS IN ALL BODY AND HATCH COMPARTMENTS

SIDE ROLL & FRONTAL IMPACT PROTECTION

CLEAR DOOR WIDTH KEY

AMDOR ROLL UP DOORS:	-2 1/4"
GORTITE ROLL UP DOORS:	-2 1/2"
PIERCE DOUBLE LAP DOORS:	-4 1/4"
PIERCE LIFT-UP LAP DOORS:	-1 1/2"

(EX: 60"F-F - 2 1/4"= 57 3/4" CLEAR)
(F-F)= FRAME TO FRAME

REV	DATE	BY	CH
1	01NOV21	DHE	AZU
2	31AUG21	DHE	BSE
3	09JUL21	DHE	CDK

CHASSIS DATA
MAKE: PIERCE
MODEL: EN7010

Pierce MANUFACTURING INC.

TITLE: HEAVY DUTY RESCUE
RESCUE PUC W/500 GAL WATER TANK 20 GAL FOAM CELL

FOR: BROKEN ARROW
BID #975 ROGER BROWN

DWG NO. 36387AD

JOB NO.	36387
SCALE	1:24
DATE	
DRAWN BY	DHE 25JUN21
CHECKED BY	CDK 28JUN21
SHEET SIZE	D
SHEET NO.	1 OF 1

View File Created 01-NOV-2021 13:38:26