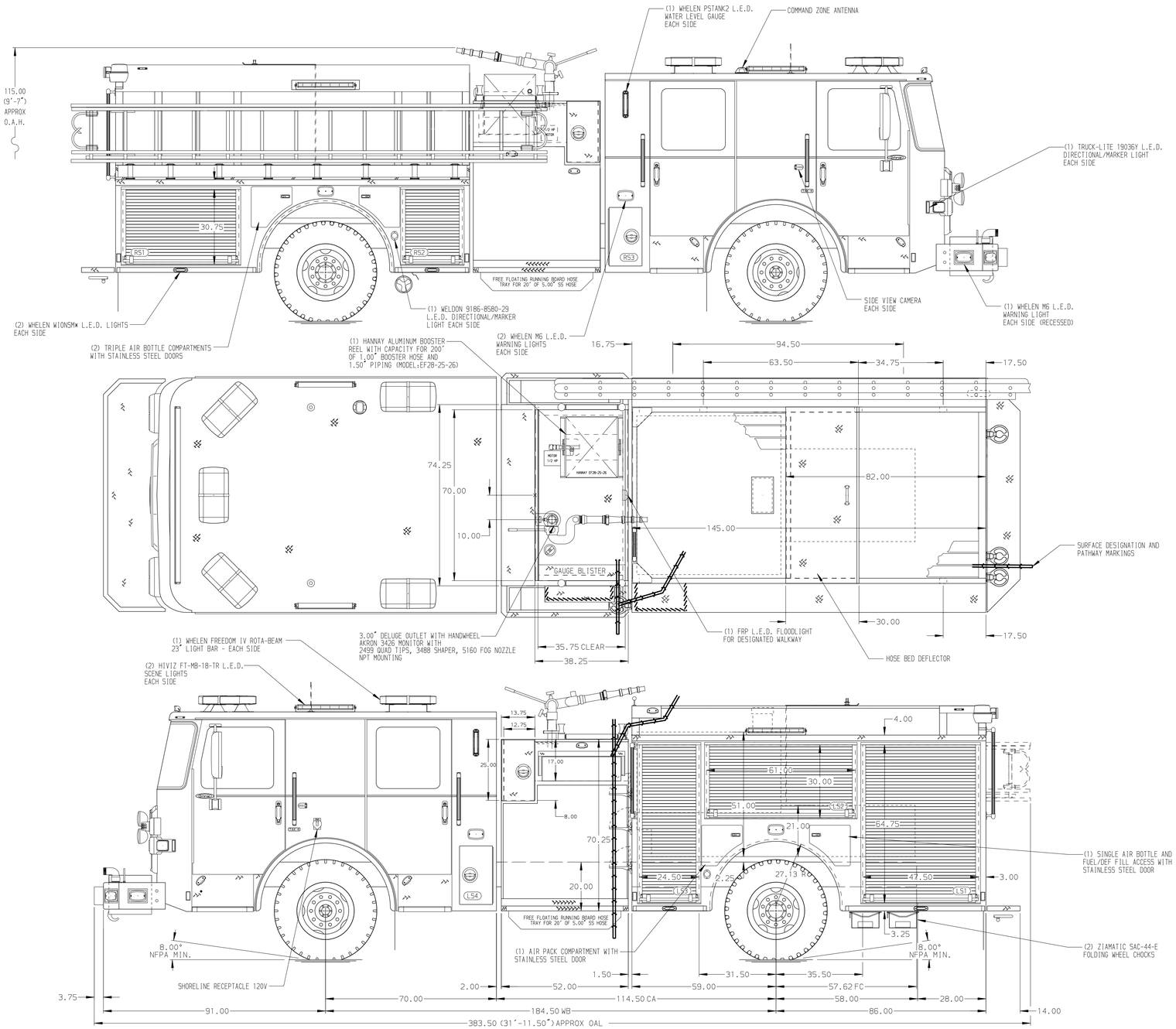

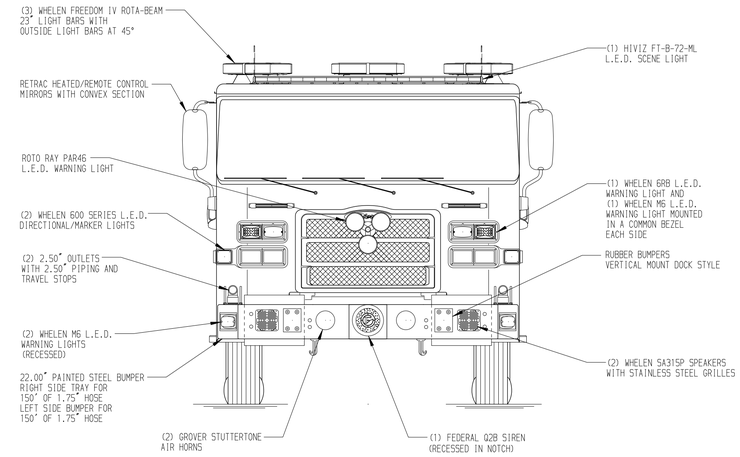

HOSEBED CAPACITIES

1. 200' OF 1.75" DJP HOSE
2. 200' OF 2.50" DJP HOSE
3. 1200' OF 4.00" DJP HOSE
4. 400' OF 2.50" DJP HOSE
5. 200' OF 1.75" DJP HOSE

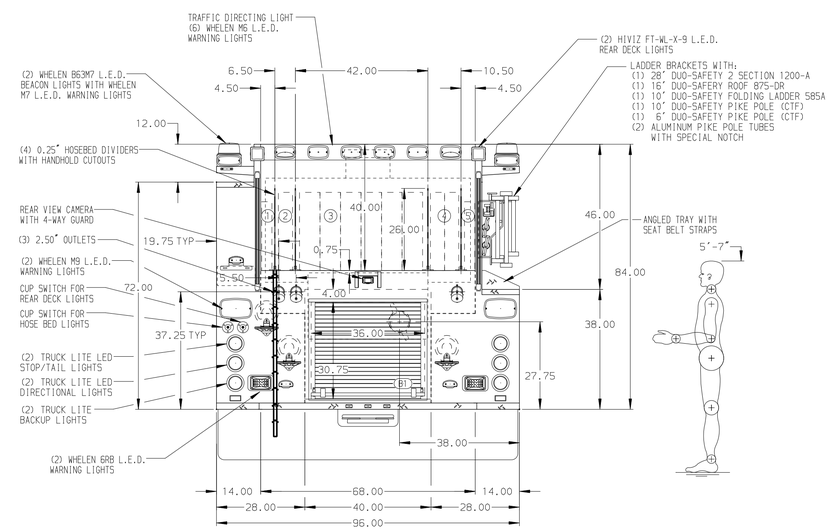

ALUMINUM BODY

NOTE

DIMENSIONS SHOWN ARE APPROXIMATE AND ARE SUBJECT TO MINOR DEVIATIONS AS MAY OCCUR OR BE NECESSARY IN CONSTRUCTION.
MINOR DETAILS NOT SHOWN.

1. AIR INLET WITH DISCONNECT COUPLING LOCATED IN DRIVER'S SIDE STEPWELL
2. BATTERY CHARGER LOCATED IN COMPARTMENT LS3
3. BATTERY CHARGER INDICATOR LOCATED ON DRIVER'S SEAT RISER
4. DUAL L.E.D. LIGHT STRIPS LOCATED IN HOSE BED
5. DRIP PAN GUARD FOR ROLL-UP DOOR LOCATED ON ALL ROLL UP DOORS
6. ONE FULL WIDTH/DEPTH ADJUSTABLE SHELF IN COMPARTMENT B1; TWO IN LS1 AND LS3
7. ONE FLOOR MOUNTED SLIDE-OUT TRAY IN COMPARTMENTS LS1, RS1, RS2, AND B1
8. CTECH DRAWER ASSEMBLY IN COMPARTMENT LS3
9. SWING-OUT TOOL BOARD WITH PEGBOARD PATTERN IN COMPARTMENT LS2
10. 6" REAR INLET WITH CHROME LONG HANDLE AND 5" PLUMBING THRU TANK LOCATED IN B1

REV	DATE	BY	CH
B	22NOV21	SAM	CWI
A	22OCT21	SAM	CWI

Pierce MANUFACTURING INC.

CHASSIS DATA	TITLE	1500-D-750P, 750G WATER, 145" PUMPER BODY (1) CROSSLAY, BOOSTER REEL, ZICO LADDER RACK	JOB NO. 36397
MAKE: PIERCE	FOR	GUTHRIE FIRE DEPARTMENT GUTHRIE, OKLAHOMA	SCALE 1:24
MODEL: ENFORCER	DWG NO.	36397AD	DRAWN BY SAM 09JUL21
			CHECKED BY CZA 20JUL21
			SHEET SIZE D
			SHEET NO. 1 OF 1

View File Created 22-NOV-2021 14:46:59