PASSENGER'S SIDE COMPARTMENTS CONTAIN THE FOLLOWING:

COMPARTMENT RS1 CONTAINS:
- (1) VERTICAL COMPARTMENT DIVIDER
- (3) STD DEPTH ADJ SHELVES
- (1) RACK FOR SIX SCBA BOTTLES
- (1) SPACESAVER 2-BOTTLE FILL ENCLOSURE
- (1) CASCADE SYSTEM CONTROL PANEL
- REGULATOR AND GAUGE FOR TOOL AIR REEL
- (1) HIGH PRESSURE AIR REEL W/200' OF HOSE
- (1) TOOL AIR REEL W/200' OF HOSE
-

COMPARTMENT RS2 CONTAINS:
- (1) STD DEPTH ADJ SLIDE OUT/TILT TRAY

COMPARTMENT RS3 CONTAINS:
- (1) STD DEPTH ADJ SLIDE OUT/TILT TRAY

COMPARTMENT RS4 CONTAINS:
- (1) HORIZONTAL FLOOR EXTENSION
- (2) 1/2 DEPTH ADJ SLIDE OUT/TILT TRAYS
- (1) STD DEPTH FLOOR MOUNTED TRAY
- (1) VERTICAL COMPARTMENT DIVIDER
- (1) RACK FOR FOUR EXTINGUISHERS
- (2) 1/2 DEPTH SLIDE OUT TOOLBOARDS
- (1) VERTICAL REAR WALL DIVIDER

COMPARTMENT RS5 CONTAINS:
- (1) RACK FOR 2 PIKE POLES
- (1) HORIZONTAL FLOOR EXTENSION
- (1) L-SHAPED COMPARTMENT DIVIDER
- (2) 1/2 DEPTH ADJ SHELVES
- (1) VERTICAL REAR WALL DIVIDER
- (1) ELECTRIC CORD REEL WITH 200' OF 10/4 YELLOW CORD
- (1) HYDRAULIC REEL WITH 100' OF HOSE

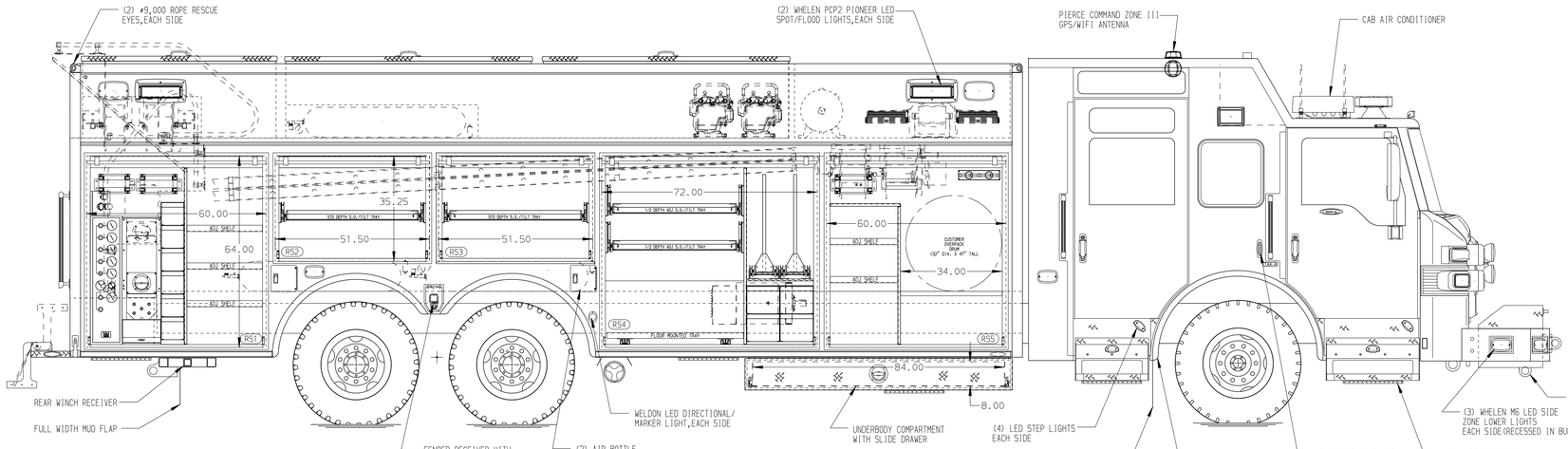

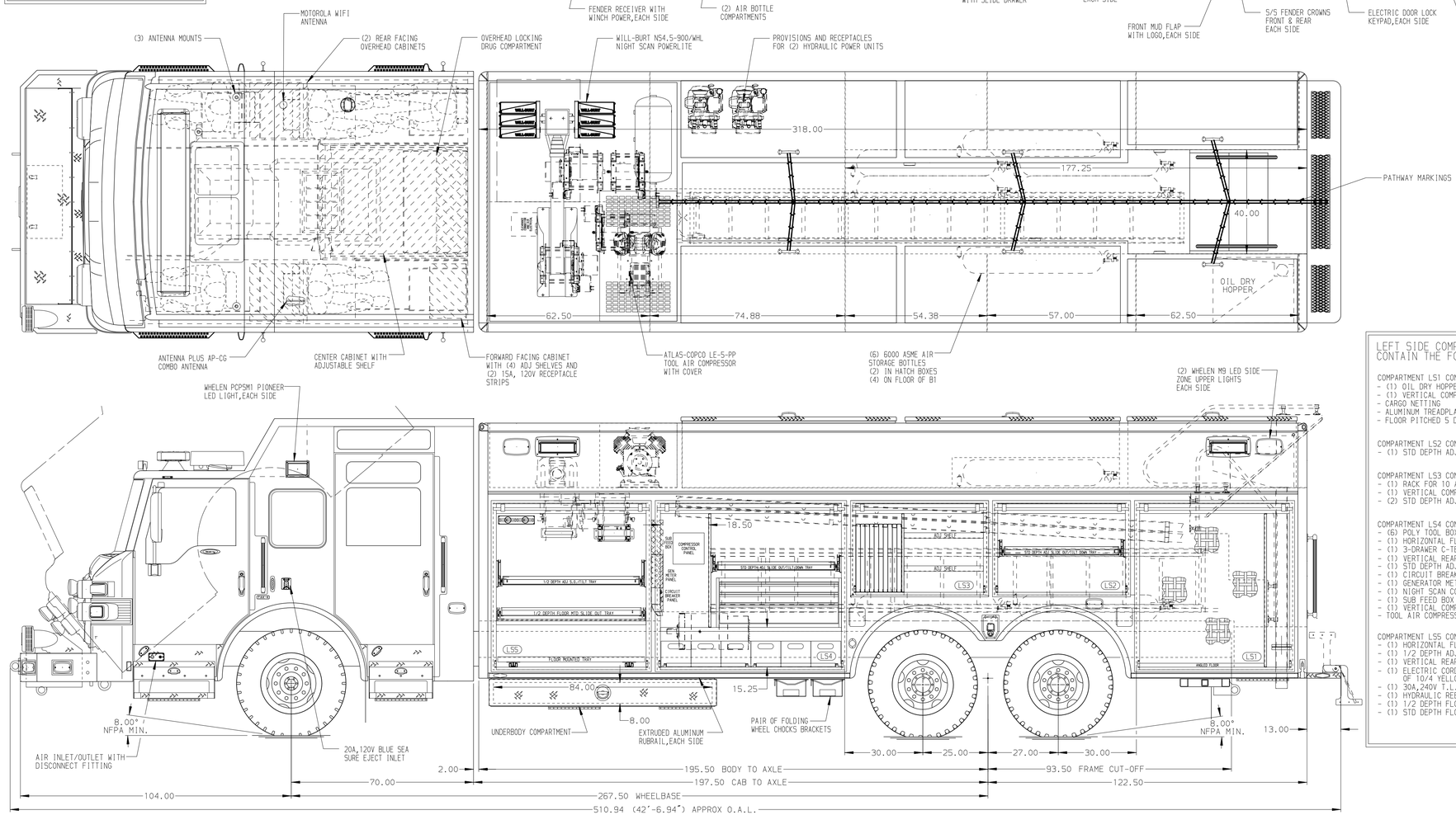

REAR COMPARTMENT CONTAINS THE FOLLOWING:

COMPARTMENT B1 CONTAINS:
-

COMPARTMENT B2 CONTAINS:
- (1) RACK FOR THE FOLLOWING:
  - (2) 28' 2-SECTION LADDERS
  - (2) 16' ROOF LADDERS MTD AT 3°
  - (1) 10' FOLDING LADDER
  - (4) PIKE POLES
- (2) LUMBER STORAGE TROUGHS

LEFT SIDE COMPARTMENTS CONTAIN THE FOLLOWING:

COMPARTMENT LS1 CONTAINS:
- (1) OIL DRY HOPPER
- (1) VERTICAL COMPARTMENT DIVIDER
- CARGO NETTING
- ALUMINUM TREADPLATE ON COMPARTMENT FLOOR
- FLOOR PITCHED 5 DEGREES IN COMPARTMENT

COMPARTMENT LS2 CONTAINS:
- (1) STD DEPTH ADJ SLIDE OUT/TILT TRAY

COMPARTMENT LS3 CONTAINS:
- (1) RACK FOR 10 AIR BAGS
- (1) VERTICAL COMPARTMENT DIVIDER
- (2) STD DEPTH ADJ SHELVES

COMPARTMENT LS4 CONTAINS:
- (6) POLY TOOL BOXES W/ROLLER AND DURASURF
- (1) HORIZONTAL FLOOR EXTENSION
- (1) 3-DRAWER C-TECH CABINET
- (1) VERTICAL REAR WALL DIVIDER
- (1) STD DEPTH ADJ SLIDE OUT/TILT TRAY
- (1) CIRCUIT BREAKER PANEL
- (1) GENERATOR METER PANEL
- (1) NIGHT SCAN CONTROLLER
- (1) SUB FEED BOX
- (1) VERTICAL COMPARTMENT DIVIDER
- TOOL AIR COMPRESSOR CONTROL PANEL

COMPARTMENT LS5 CONTAINS:
- (1) HORIZONTAL FLOOR EXTENSION
- (1) 1/2 DEPTH ADJ SLIDE OUT/TILT TRAY
- (1) VERTICAL REAR WALL DIVIDER
- (1) ELECTRIC CORD REEL WITH 200' OF 10/4 YELLOW CORD
- (1) 30A,240V T.L. RECEPTACLE
- (1) HYDRAULIC REEL WITH 100' OF HOSE
- (1) 1/2 DEPTH FLOOR MTD SLIDE OUT TRAY
- (1) STD DEPTH FLOOR MTD SLIDE OUT TRAY

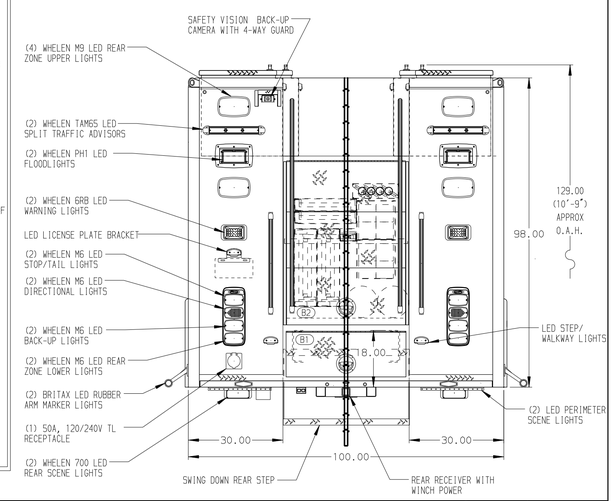

NOTE

DIMENSIONS SHOWN ARE APPROXIMATE AND ARE SUBJECT TO MINOR DEVIATIONS AS MAY OCCUR OR BE NECESSARY IN CONSTRUCTION.
MINOR DETAILS NOT SHOWN.

NOTES:
1. POLISHED S/S SCUFFPLATES ON CAB DOOR JAMBS
2. FLOOR IN CAB AND CREW CAB TO BE ALUMINUM TREADPLATE
3. DAVID CLARK 5 POSITION INTERCOM SYSTEM
4. IOTA 75 AMP CHARGER LOCATED BEHIND THE DRIVER'S SEAT
5. BATTERY CHARGE INDICATOR LOCATED ON DRIVER'S SEAT WITH BRACKET
6. PULL STRAPS ON ALL BODY ROLL-UP DOORS
7. S/S GUARDS ON ALL BODY ROLL-UP DOORS
8. AMDOR LED STRIP LIGHTS IN ALL BODY AND HATCH COMPARTMENTS
9. ONAN 35kW SINGLE PHASE PTO DRIVEN GENERATOR WITH SPLASH GUARD LOCATED BETWEEN THE FRAME RAILS

TAK-4 T-3 REAR SUSPENSION

SIDE ROLL AND FRONTAL IMPACT PROTECTION

CLEAR DOOR WIDTH KEY

AMDOR ROLL UP DOORS:	-2 1/4"
GORITTE ROLL UP DOORS:	-2 1/2"
PIERCE DOUBLE LAP DOORS:	-4 1/4"
PIERCE LIFT-UP LAP DOORS:	-1 1/2"

(EX: 60"F-F - 2 1/4" = 57 3/4" CLEAR)
(F-F)= FRAME TO FRAME

REV	DATE	BY	CH
1	18JAN22	DHE	AZU
2	29OCT21	DHE	JJR
3	13AUG21	DHE	AZU

CHASSIS DATA
MAKE: PIERCE
MODEL: VXFR7020
DWG NO.

Pierce MANUFACTURING INC.

TITLE: HEAVY DUTY RESCUE NON-WALKIN
FOR: HENRICO COUNTY HENRICO, VA

36428AD

JOB NO.	36428
SCALE	1:24
DATE	28JUL21
DRAWN BY	DHE
CHECKED BY	AZU
SHEET SIZE	D
SHEET NO.	1 OF 1

View File Created 18-JAN-2022 08:00:10