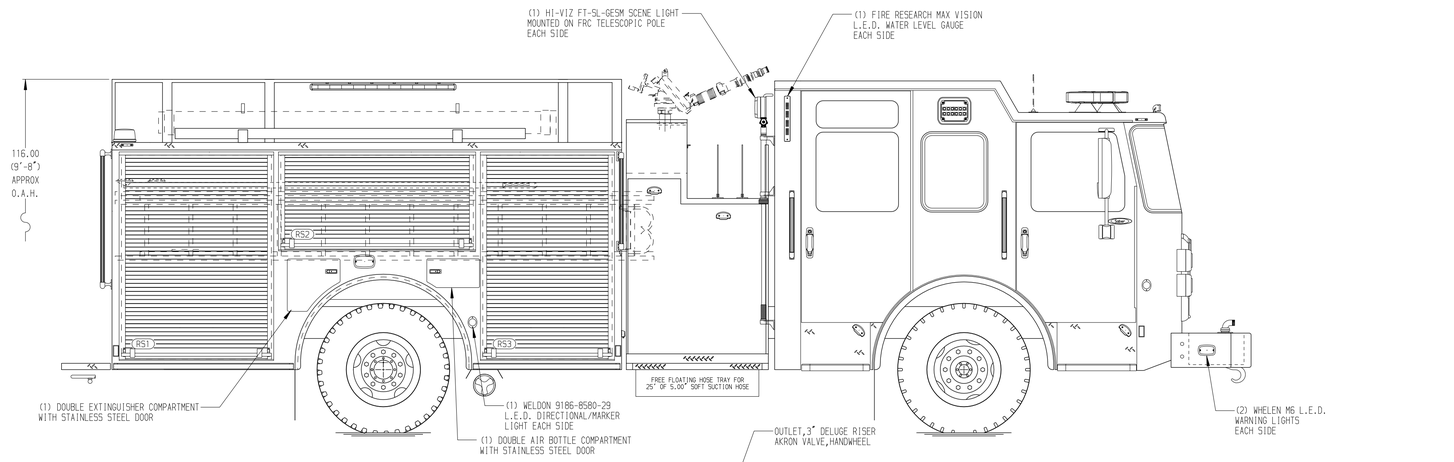


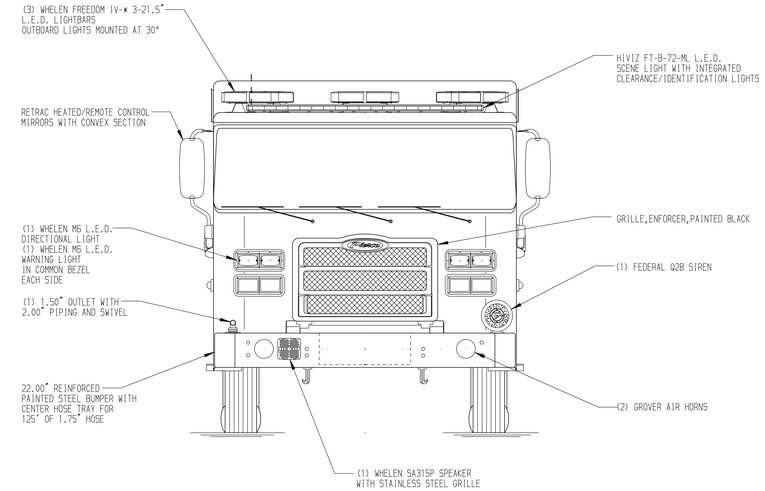


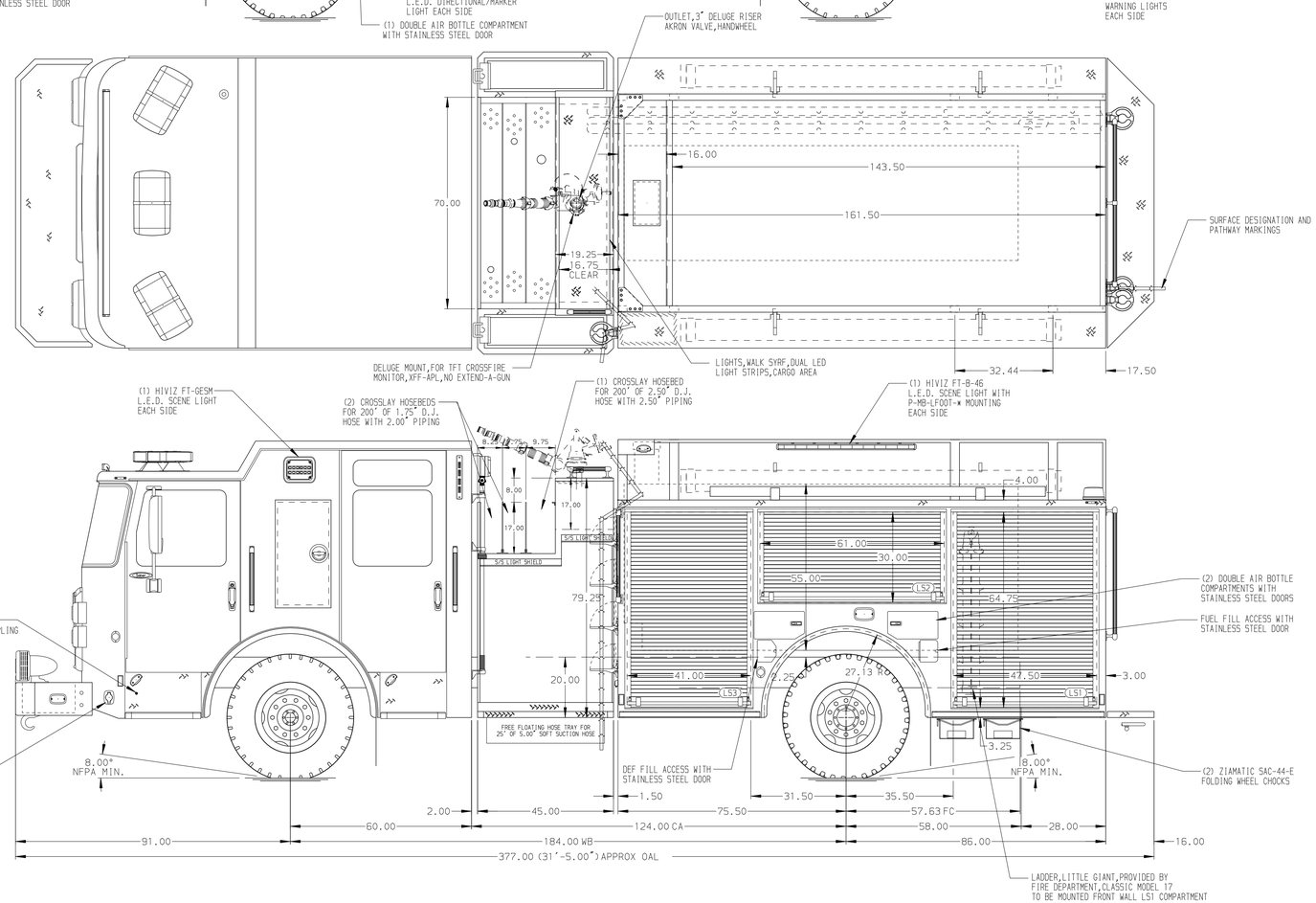


HOSEBED CAPACITIES

① - 400' OF 3.00" DJP HOSE

② - 800' OF 5.00" SUPPLY

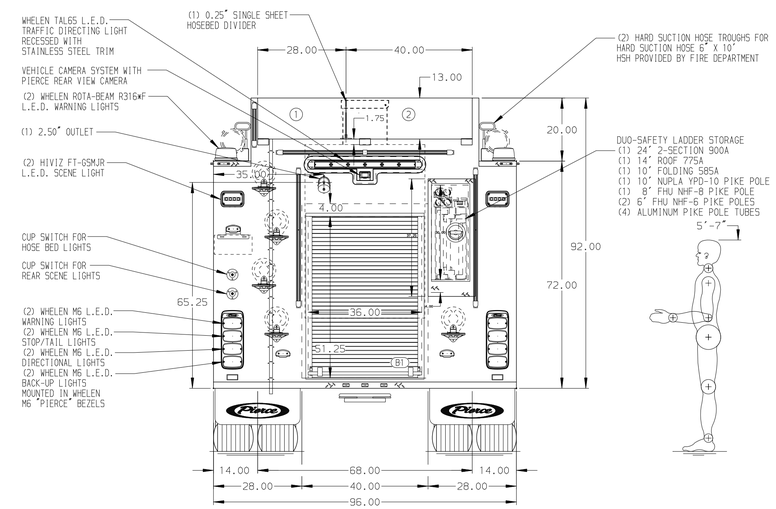


ALUMINUM BODY

NOTE

DIMENSIONS SHOWN ARE APPROXIMATE AND ARE SUBJECT TO MINOR DEVIATIONS AS MAY OCCUR OR BE NECESSARY IN CONSTRUCTION.
MINOR DETAILS NOT SHOWN.

| REV | DATE | BY | CH |
|---|---|---|---|
| 3 | 08NOV21 | JLA | GSC |
| 2 | 19OCT21 | JLA | GSC |
| 1 | 27AUG21 | SAM | WKI |

CHASSIS DATA — MAKE: PIERCE — MODEL: SABER FR

**Pierce MANUFACTURING INC.**

TITLE: 1500-D-1000P, 1000G WATER, 161" PUMPER BODY (3) CROSSLAYS, LADDERS BTWN TANK/SS, DELUGE OUTLET

FOR: ST. JOHN DEPARTMENT OF FIRE SERVICES GARYVILLE, LOUISIANA

DWG NO.: 36488AD

| JOB NO. | 36488 |
|---|---|
| SCALE | 1:24 |
| DATE | |
| DRAWN BY | SAM 24AUG21 |
| CHECKED BY | EGO 24AUG21 |
| SHEET SIZE | D |
| SHEET NO. | 1 OF 1 |

View File Created 09-NOV-2021 06:56:25