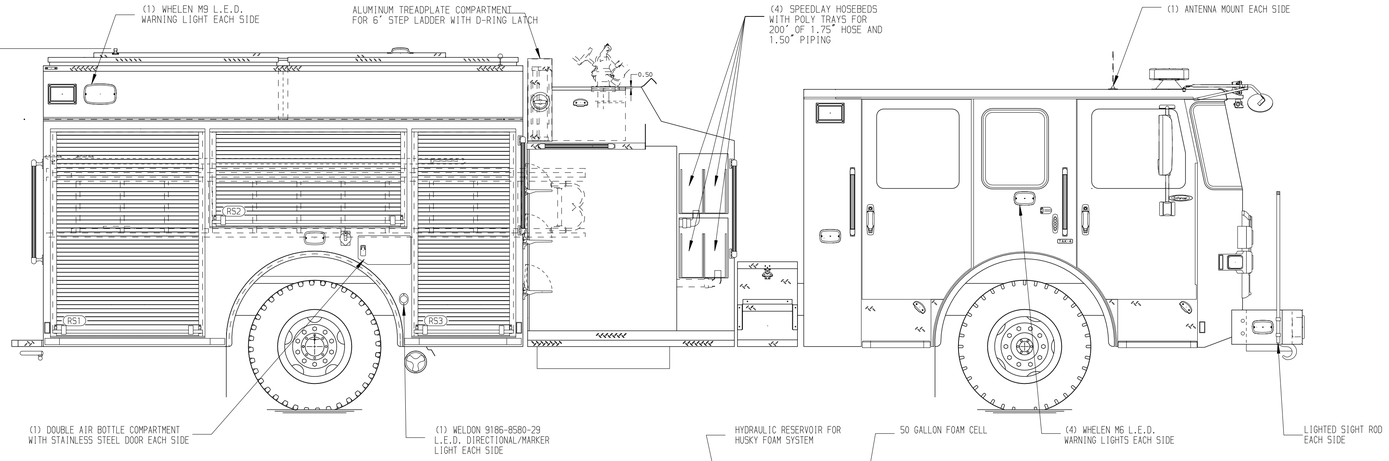

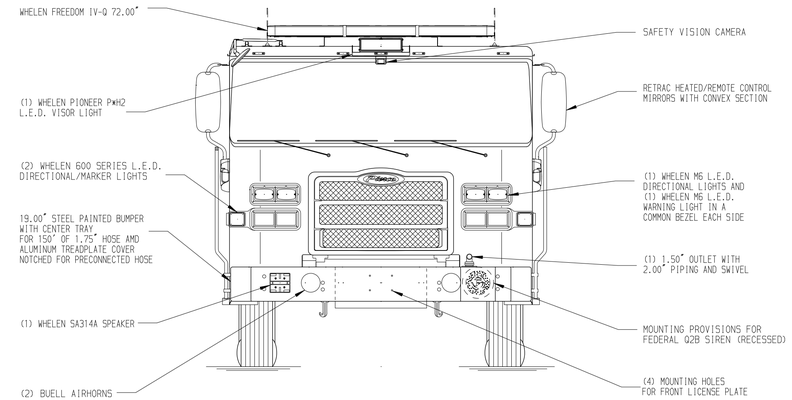

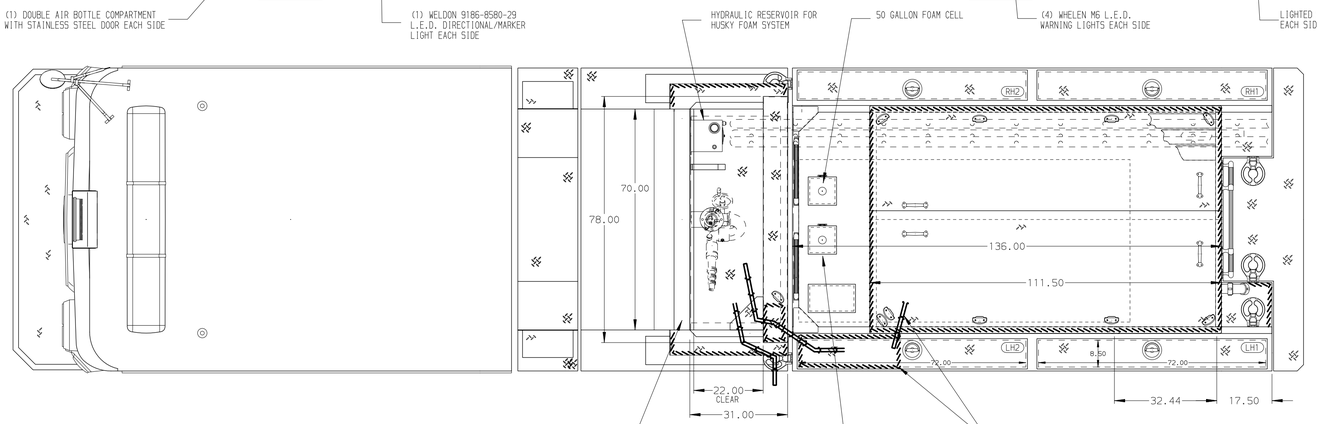

HOSEBED CAPACITIES

1 - 200' OF 2.50" D.J. POLY HOSE
2 - 500' OF 2.50" D.J. POLY HOSE
3 - 1000' OF 5.00" D.J. POLY HOSE

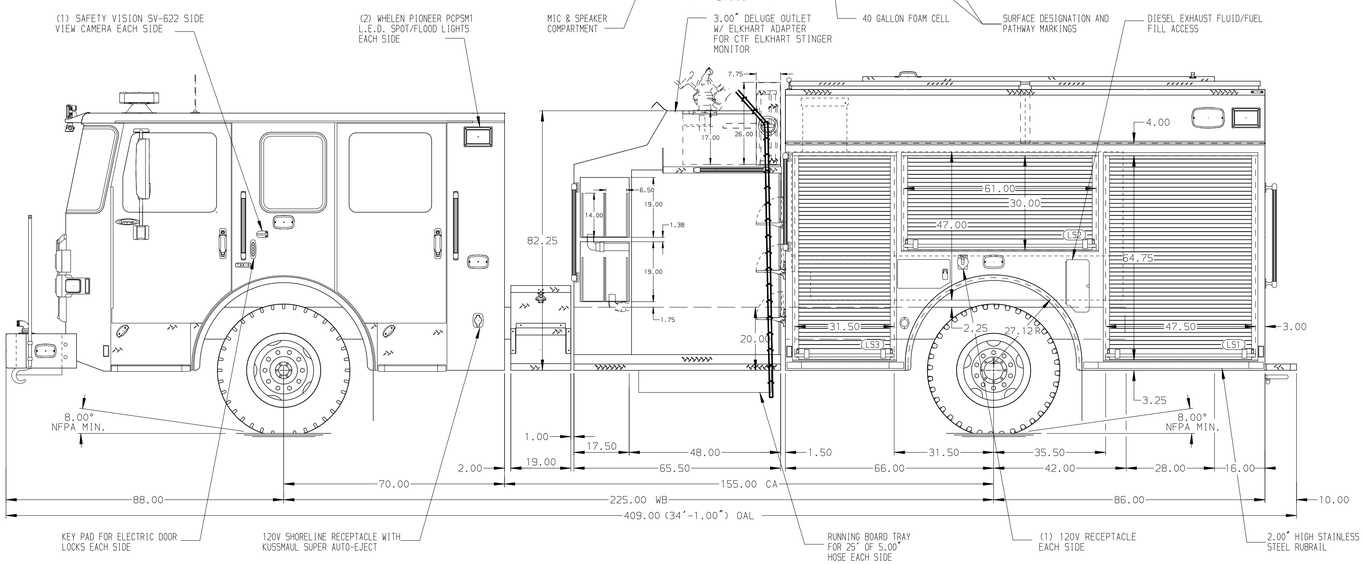

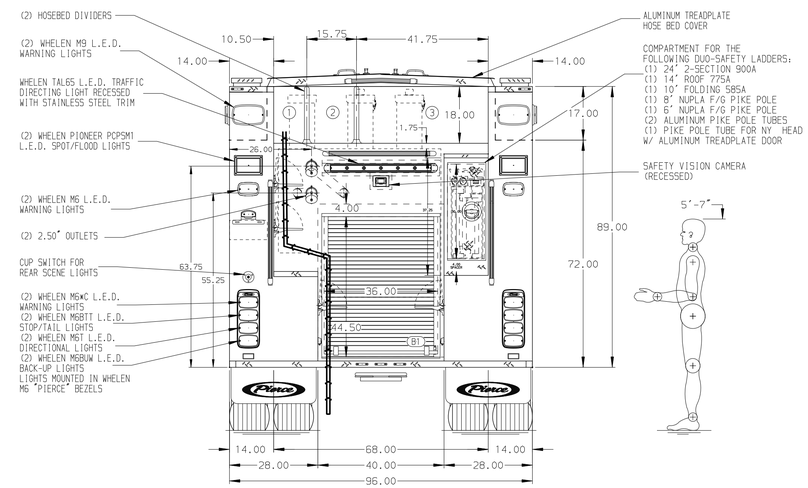

ALUMINUM BODY | MAXIMUM O.A.L. 432.00" | MAXIMUM O.A.H. 119.50" | SIDE ROLL AND FRONTAL IMPACT PROTECTION

NOTE

DIMENSIONS SHOWN ARE APPROXIMATE AND ARE SUBJECT TO MINOR DEVIATIONS AS MAY OCCUR OR BE NECESSARY IN CONSTRUCTION.
MINOR DETAILS NOT SHOWN.

1. BATTERY CHARGER LOCATED PER SHOP ORDER
2. BATTERY CHARGER INDICATOR LOCATED ON DRIVER'S SEAT RISER
3. DUAL L.E.D. LIGHT STRIPS LOCATED ON THE FRONT OF THE HOSEBED
4. L.E.D. LIGHT STRIP LOCATED IN HOSE BEDS PER SHOP ORDER
5. DRIP PAN GUARD FOR ROLL-UP DOOR PER SHOP ORDER
6. SEVEN FULL WIDTH/DEPTH ADJUSTABLE SHELVES PER SHOP ORDER
7. ONE FLOOR MOUNTED SLIDE-OUT TRAY PER SHOP ORDER
8. SWING-OUT TOOL BOARD WITH PEGBOARD PATTERN PER SHOP ORDER
9. ALUMINUM PEGBOARD PER SHOP ORDER
10. AIR INLET/OUTLET LOCATED ON DRIVERS SIDE PUMP PANEL

REV	DATE	BY	CH
7	29DEC21	JJB	CHR
6	05NOV21	JJB	COS

CHASSIS DATA — MAKE: PIERCE — MODEL: ENFORCER

Pierce MANUFACTURING INC.

TITLE: 1500-D-840P, 750G WATER W/50G & 40G FOAM, 152" BODY LADDERS BTWN TANK & SS, (4) SPEEDLAYS, DELUGE

FOR: BEAUMONT FIRE RESCUE, BEAUMONT, TEXAS

DWG NO.: 36497AD

JOB NO.	SCALE	DRAWN BY	CHECKED BY	SHEET SIZE	SHEET NO.
36497	1:24	JJB	EGO	D	1 OF 1

DATE: 25AUG21 (DRAWN BY) — 25AUG21 (CHECKED BY)

View File Created 03-JAN-2022 09:04:19