RIGHT SIDE COMPARTMENTS CONTAIN THE FOLLOWING:

COMPARTMENT RS1 CONTAINS:
- (1) FLOOR MTD SLIDE OUT TRAY W/TOOLBOARD
- (4) STD DEPTH ADJ SHELVES
- (2) HYD REELS WITH 100' OF CORE-TECH HOSE
- (1) MOUNTING PROVISION FOR FUTURE HYD REEL
- (2) VERTICAL "L"-SHAPED DIVIDERS
- (1) 30A,240V 3-PRONG RECEPTACLE
- (1) FLOOR MOUNTED TRAY
- (1) SLIDE-OUT ROLLER GUIDE BRACKET
- (1) SWITCH FOR 30A RECEPTACLE

COMPARTMENT RS2 CONTAINS:
- (1) ELECTRIC CORD REEL WITH 200' OF 10/4 YELLOW CORD
- (1) SLIDE-OUT ROLLER GUIDE BRACKET
-

COMPARTMENT RS3 CONTAINS:
- (2) REINFORCED PEGBOARD VERTICAL COMPARTMENT DIVIDERS
- (2) STD DEPTH ADJ SHELVES
- (2) STD DEPTH SLIDE OUT TOOLBOARDS
- (1) FLOOR MOUNTED TRAY
-

COMPARTMENT RS4 CONTAINS:
- (1) FLOOR MOUNTED TRAY
- (1) 3/4 DEPTH ADJ SHELF W/2" DOWN FRONT LIP
- (1) 3/4 DEPTH ADJ SLIDE OUT TRAY
- (1) LOW PRESSURE AIR REEL WITH 200' OF HOSE
- REGULATOR AND GUAGES FOR AIR REEL
- (1) SLIDE-OUT ROLLER GUIDE BRACKET
- (1) BLUE SEA CHARGER
-

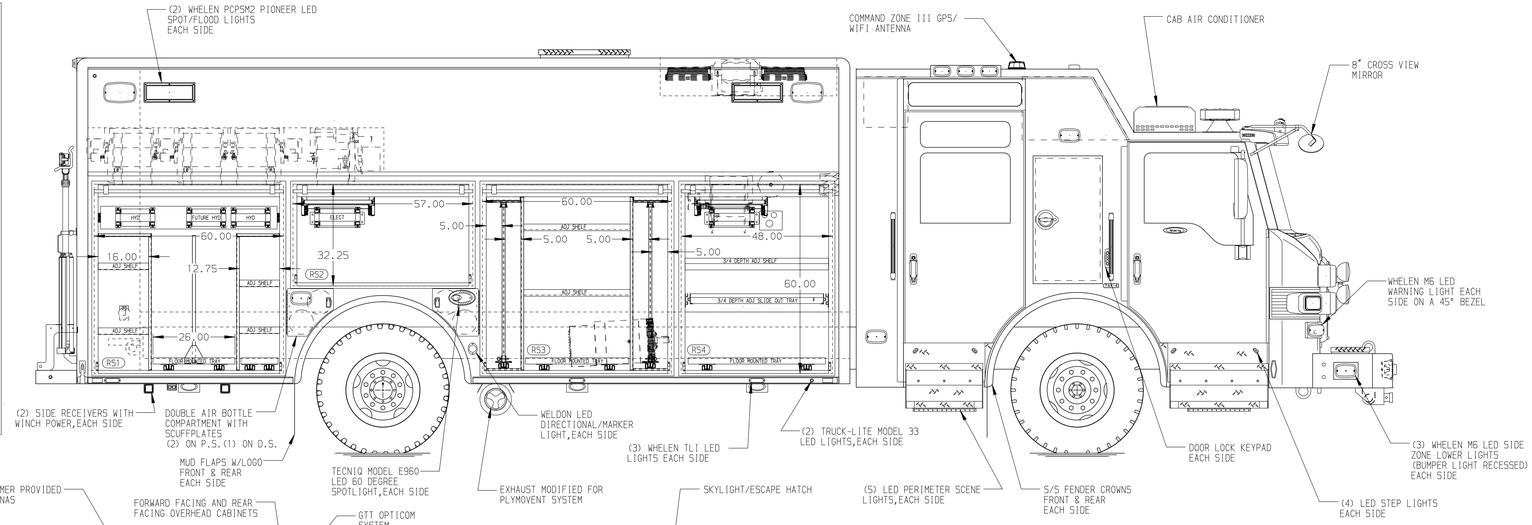

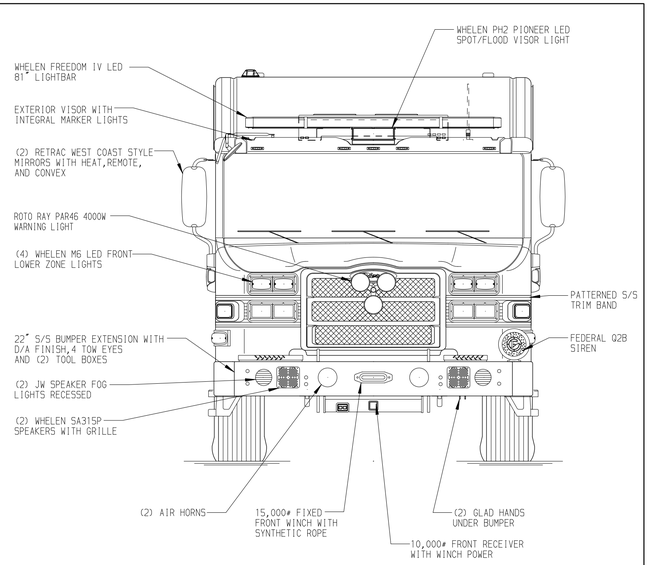

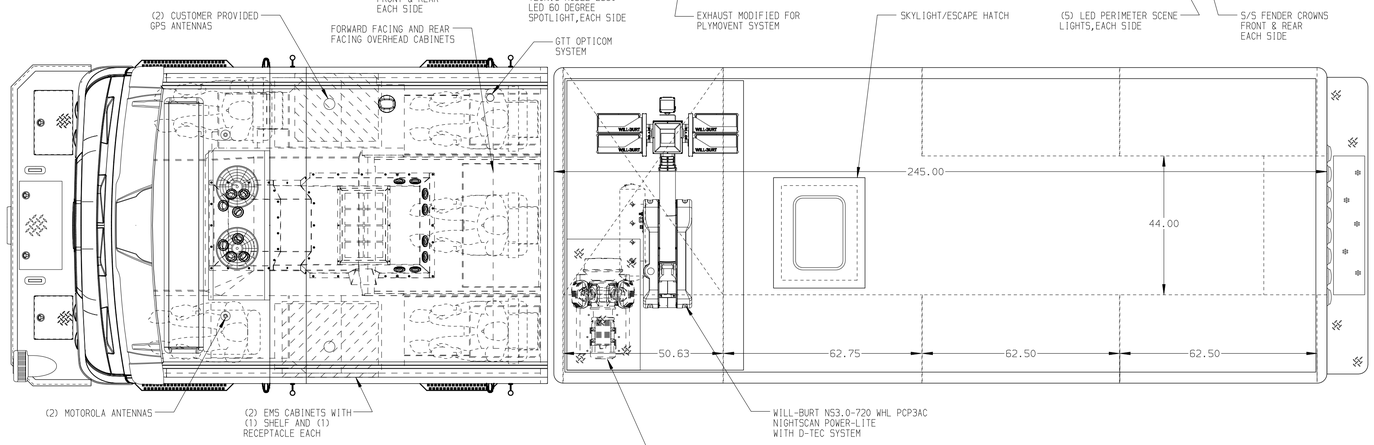

LEFT SIDE COMPARTMENTS CONTAIN THE FOLLOWING:

COMPARTMENT LS1 CONTAINS:
- (1) VERTICAL COMPARTMENT DIVIDER
- ANGLED COMPARTMENT FLOOR
- (1) STD DEPTH ADJ SHELF(FLANGE DOWN)
- (1) POWER DISTRIBUTION BOX
- (3) STD DEPTH ADJ SHELVES

COMPARTMENT LS2 CONTAINS:
- (1) STD DEPTH ADJ SHELF
- (1) ELECTRIC CORD REEL WITH 200' OF 10/4 YELLOW CORD
- (1) SLIDE-OUT ROLLER GUIDE BRACKET

COMPARTMENT LS3 CONTAINS:
- (2) STD DEPTH ADJ SHELVES
- (1) REINFORCED PEGBOARD VERTICAL COMPARTMENT DIVIDER
- (1) FLOOR MOUNTED TRAY
- (1) STD DEPTH SLIDE OUT TOOLBOARD
-

COMPARTMENT LS4 CONTAINS:
- (1) STD DEPTH ADJ SHELF
- (1) REAR WALL DIVIDER
- (1) REINFORCED PEGBOARD VERTICAL COMPARTMENT DIVIDER
- (1) CIRCUIT BREAKER PANEL
- (1) NIGHT SCAN CONTROLLER
- (1) GENERATOR METER PANEL
- (1) AIR COMPRESSOR CONTROL PANEL
- (1) 15/20A,120V DUPLEX RECEPTACLE
-
-

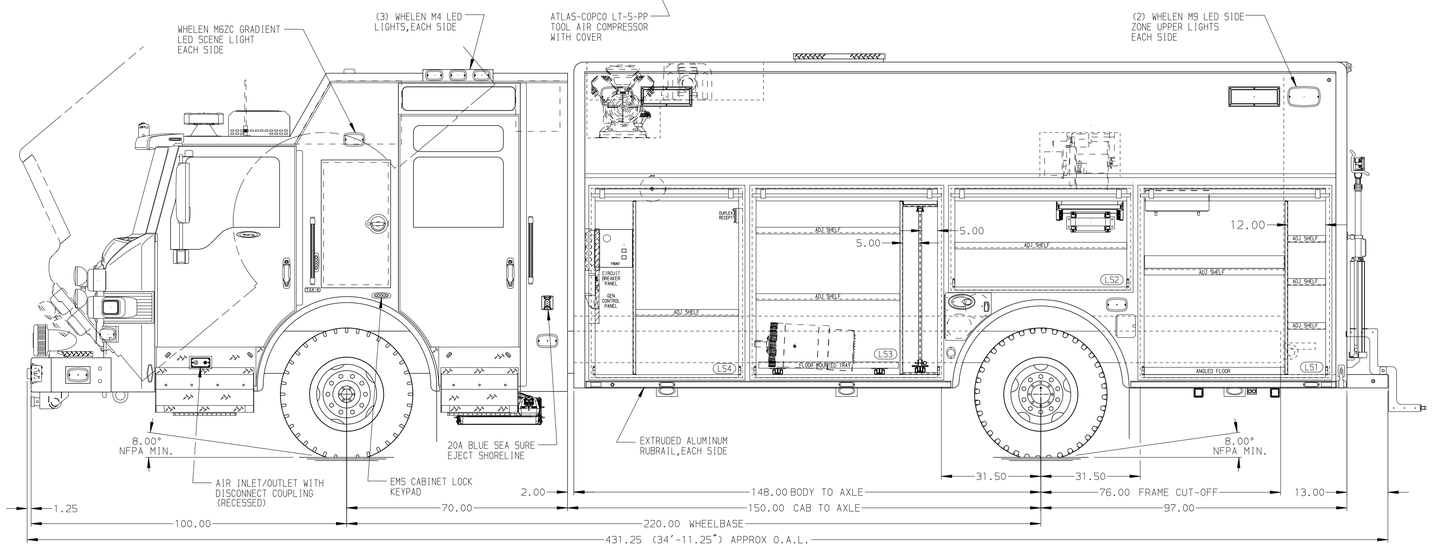

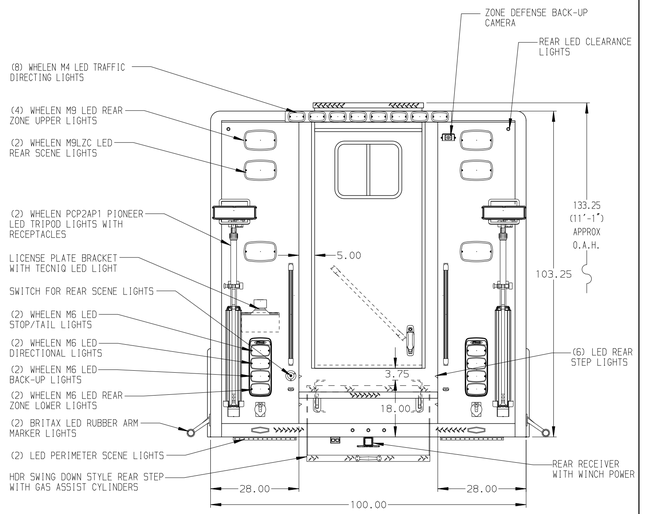

NOTE

DIMENSIONS SHOWN ARE APPROXIMATE AND ARE SUBJECT TO MINOR DEVIATIONS AS MAY OCCUR OR BE NECESSARY IN CONSTRUCTION.
MINOR DETAILS NOT SHOWN.

NOTES:
1. RUD AUTOMATIC TIRE CHAINS
2. WARN ZEON 10,000# PORTABLE WINCH WITH SYNTHETIC ROPE
3. FLOOR IN CAB AND CREW CAB TO BE PADDED RUBBER
4. DAVID CLARK 5-POSITION INTERCOM SYSTEM
5. BATTERY CHARGE INDICATOR LOCATED ON DRIVER'S SEAT
6. PULL STRAPS ON ALL ROLL UP DOOR COMPARTMENTS
7. S/S "L"-SHAPED GUARDS ON ALL ROLL UP DOORS
8. AMDOR LED COMPARTMENT LIGHTS IN EACH COMPARTMENT
9. ONAN 30kW SINGLE PHASE PTO DRIVEN GENERATOR LOCATED BETWEEN THE FRAME RAILS
10. BRUSHED S/S SCUFFPLATES ON CAB DOOR JAMBS
11. VOGEL LUBE SYSTEM
12. SEALED RAIN DRIP ON CAB AND CREW CAB

CLEAR DOOR WIDTH KEY

AMDOR ROLL UP DOORS:	-2 1/4"
GORTITE ROLL UP DOORS:	-2 1/2"
PIERCE DOUBLE LAP DOORS:	-4 1/4"
PIERCE LIFT-UP LAP DOORS:	-1 1/2"

(EX: 60"F-F - 2 1/4"= 57 3/4" CLEAR)
(F-F)= FRAME TO FRAME

SIDE ROLL & FRONTAL IMPACT PROTECTION

REV	DATE	BY	CH
V	16SEP21	DHE	CDK

CHASSIS DATA
MAKE: PIERCE
MODEL: VXFR7020

CUSTOMER APPROVAL
APPROVED BY:
DATE:

Pierce MANUFACTURING INC.

TITLE: HEAVY DUTY RESCUE WALKIN
FOR: FAIRFAX COUNTY FIRE AND RESCUE DEPT. FAIRFAX, VA
DWG NO. 36502AD-SH1

JOB NO.	36502
SCALE	1:24
DATE	
DRAWN BY	DHE
18AUG21	
CHECKED BY	CKN
20AUG21	
SHEET SIZE	D
SHEET NO.	1 OF 1

View File Created 17-SEP-2021 09:07:34