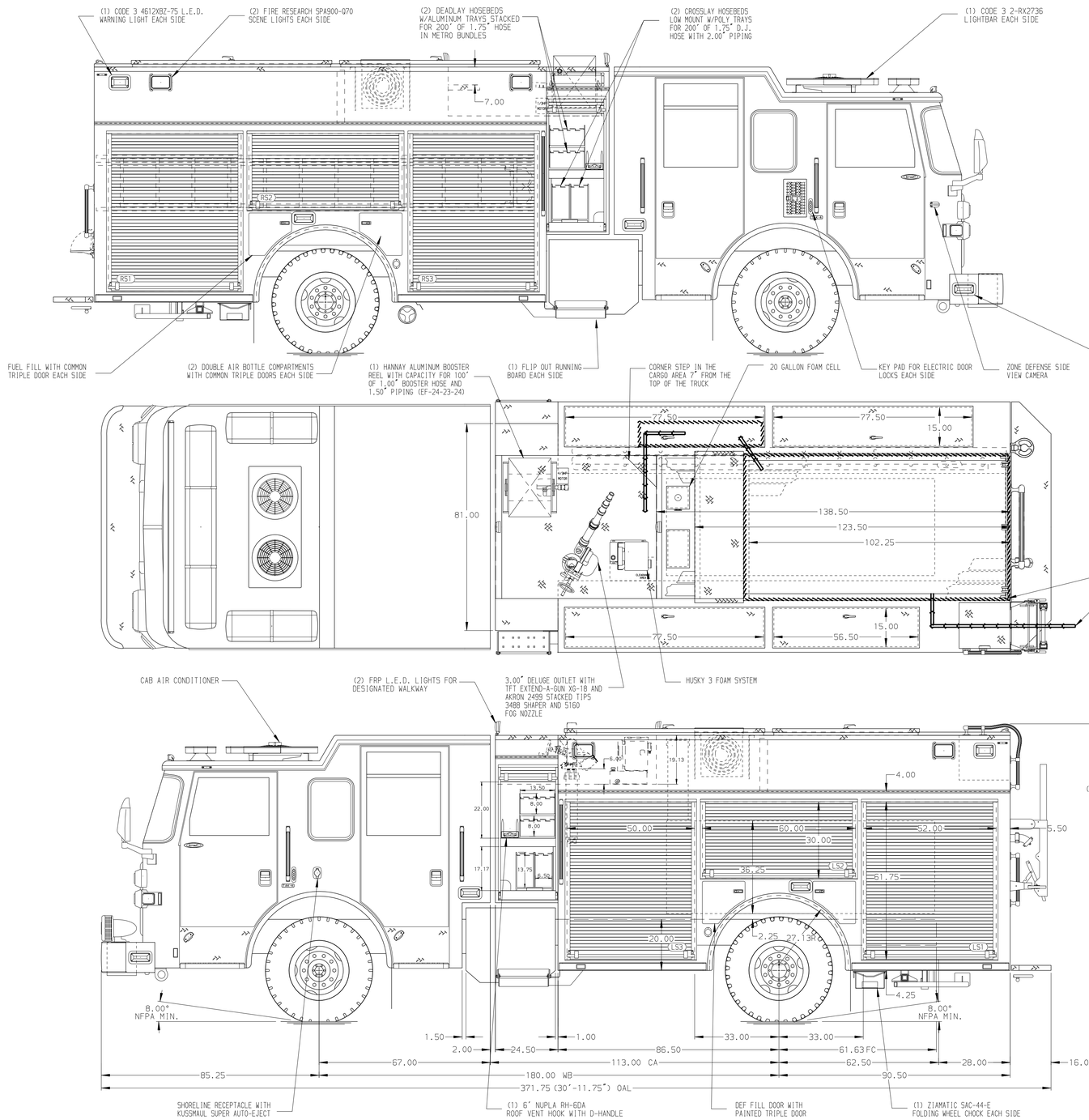

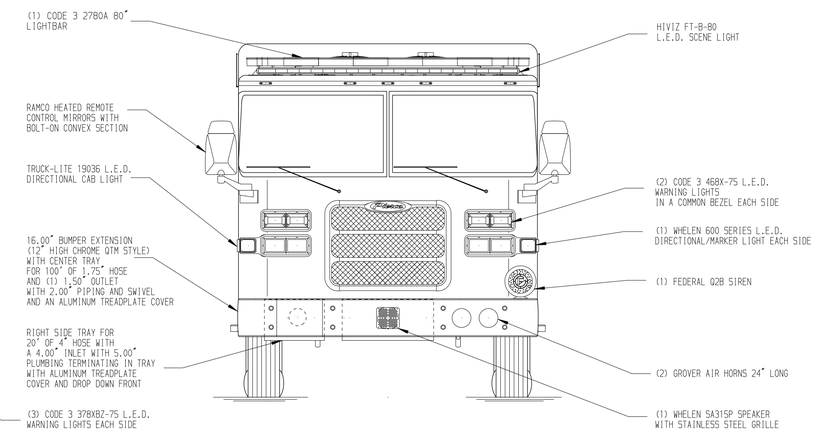

HOSEBED CAPACITIES

1. - 200' OF 1.75" D.J. POLY HOSE
2. - 600' OF 4.00" D.J. POLY HOSE
3. - 600' OF 2.50" D.J. POLY HOSE
4. - 200' OF 2.50" D.J. POLY HOSE
5. - STORAGE FOR BACKBOARD

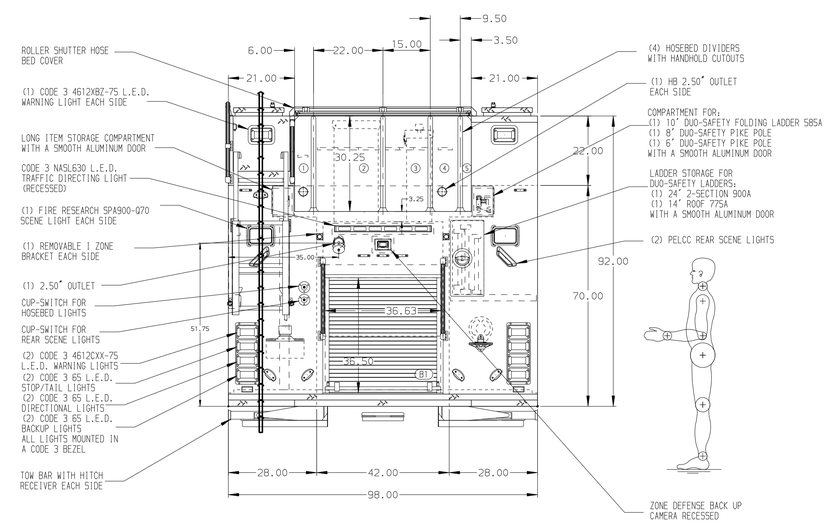

ALUMINUM BODY

MAXIMUM O.A.H. 120.00"

NOTE

DIMENSIONS SHOWN ARE APPROXIMATE AND ARE SUBJECT TO MINOR DEVIATIONS AS MAY OCCUR OR BE NECESSARY IN CONSTRUCTION.
MINOR DETAILS NOT SHOWN.

1. BATTERY CHARGER/COMPRESSOR LOCATED IN DRIVER SIDE HATCH COMPARTMENT
2. AIR INLET/ OUTLET WITH DISCONNECT FITTING IN LS3
3. BATTERY CHARGE INDICATOR LOCATED NEAR DRIVER'S SEAT RISER WITH BRACKET
4. L.E.D. DUAL LIGHT STRIPS LOCATED IN HOSE BED PER SHOP ORDER
5. THIRTEEN FULL WIDTH/DEPTH ADJUSTABLE SHELVES - LOCATION TBD

REV	DATE	BY	CH
V	22DEC21	JJB	JJR

CHASSIS DATA
MAKE: PIERCE
MODEL: ARROW XT

Pierce MANUFACTURING INC.

TITLE: 1500-D-520P, 500G WATER W/20G FOAM, 177" RESCUE PUC (3) XLAYS, LADDERS THRU BODY, DELUGE, BOOSTER REEL
FOR: RIVERSIDE CITY FIRE DEPARTMENT RIVERSIDE, CALIFORNIA
DWG NO.: 36505AD-SH1

JOB NO.	36505 (01-02)
SCALE	1:24
DATE	
DRAWN BY	JJB 25AUG21
CHECKED BY	BSE 27AUG21
SHEET SIZE	D
SHEET NO.	1 OF 1

View File Created 28-DEC-2021 09:21:15