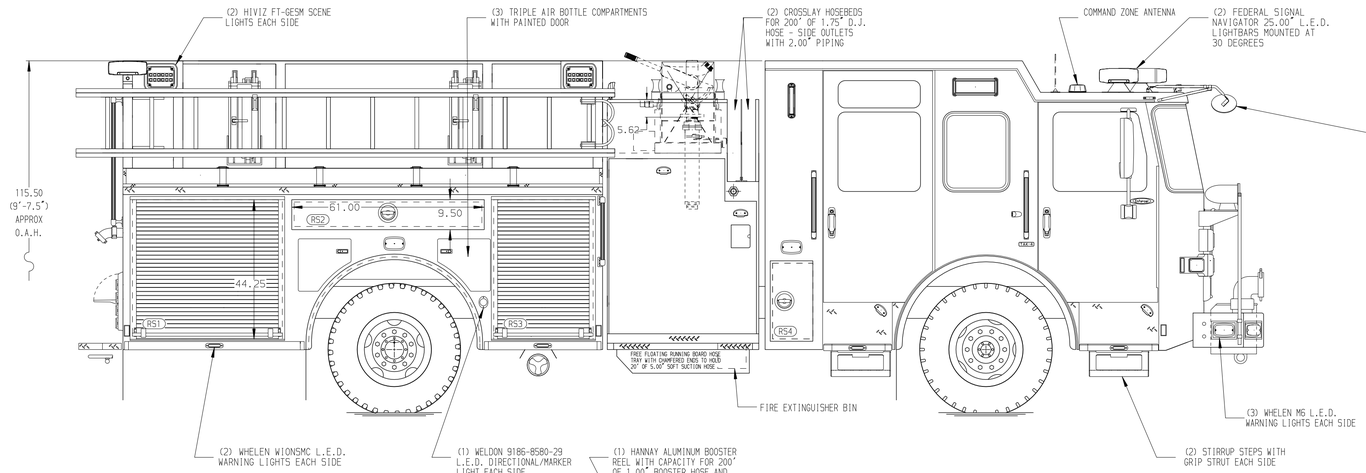

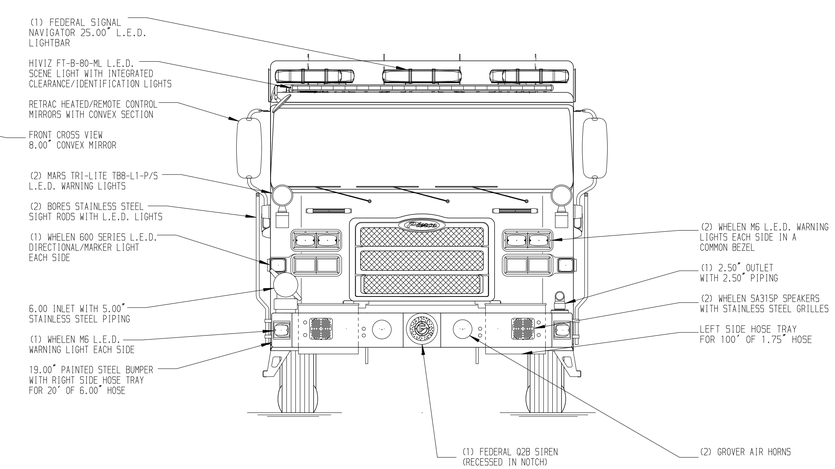

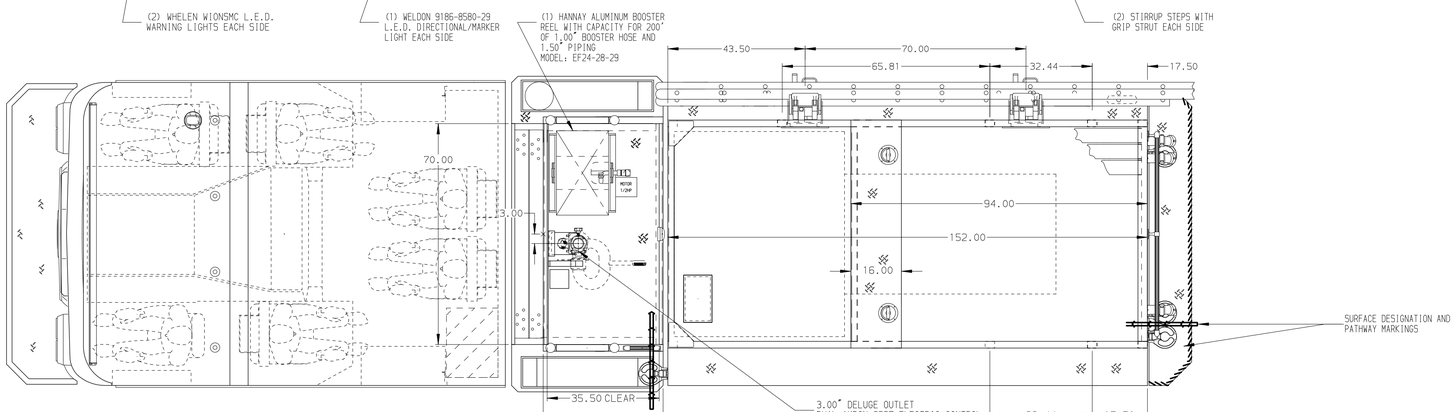

HOSEBED CAPACITIES

1. 400' OF 3.00" D.J. POLY HOSE
2. 1200' OF 5.00" D.J. POLY HOSE
3. 600' OF 2.50" D.J. POLY HOSE
4. 250' OF 2.50" D.J. POLY HOSE
5. 400' OF 1.75" D.J. POLY HOSE

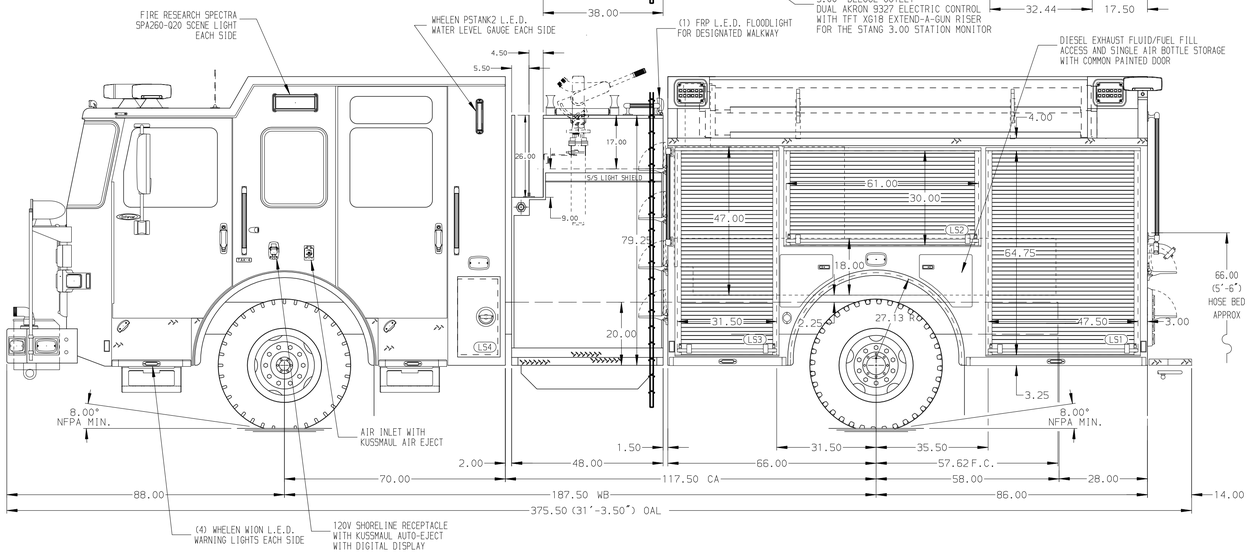

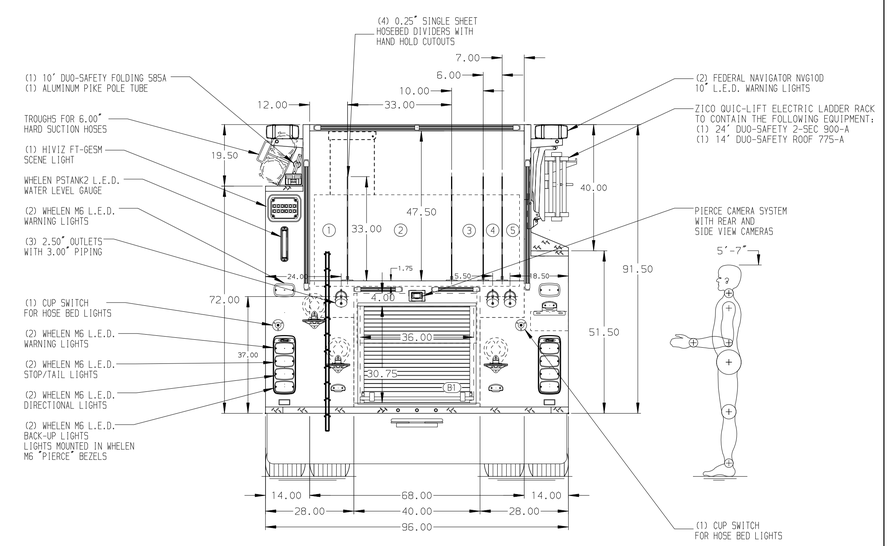

ALUMINUM BODY | MAXIMUM O.A.L. 383.00" | MAXIMUM O.A.H. 115.50" | SIDE ROLL AND FRONTAL IMPACT PROTECTION

NOTE

DIMENSIONS SHOWN ARE APPROXIMATE AND ARE SUBJECT TO MINOR DEVIATIONS AS MAY OCCUR OR BE NECESSARY IN CONSTRUCTION.
MINOR DETAILS NOT SHOWN.

1. PAC TRAC IN CAB PER SHOP ORDER
2. BATTERY CHARGER LOCATED BEHIND DRIVER'S SEAT
3. DUAL L.E.D. LIGHT STRIPS LOCATED IN HOSE BED

REV	DATE	BY	CH
1	01JAN22	JUS	CSH
2	17NOV21	JUS	CSH
3	17NOV21	JUS	CSH
4	27AUG21	JUS	PHA

CHASSIS DATA: MAKE PIERCE; MODEL ENFORCER

Pierce MANUFACTURING INC.

TITLE: 1500-D-650 GAL POLY, 152" FH FDLER L.S., 3/4 BROOM FDLER R.S., ZICO LADDER RACK, (2) CROSSLAYS

FOR: LONG HILL FIRE DISTRICT, TRUMBULL, CONNECTICUT

DWG NO. 36506AD-SH1

JOB NO.	36506
SCALE	1:24
DATE	
DRAWN BY	JUS
DATE	17AUG21
CHECKED BY	PHA
DATE	18AUG21
SHEET SIZE	D
SHEET NO.	1 OF 2

View File Created 03-JAN-2022 11:31:37