PUMPER

BODY
Medium Aluminum 2nd Gen Pumper

CHASSIS
Saber FR Chassis

CHASSIS

AXLE, FRONT, CUSTOM
18,000 lb Dana Axle

AXLE, REAR
24,000 lb Dana Axle

ENGINE
380 HP Cummins L9 Engine

TRANSMISSION
Allison 5th Gen, 3000 EVS P

BUMPER
22" Extended Stainless Steel

CAB
6000 Saber FR Cab

BODY

WATER TANK
750 Gallon Poly Water Tank

COMPT, PUMPER, REAR
44.50" FF Rollup Rear Compt

COMPT, PUMPER, LEFT SIDE
140" Rollup Full Height Front & Rear, FDLER

COMPT, PUMPER, RIGHT SIDE
140" Rollup Low, FDLER

FIRE SUPPRESSION

PUMPHOUSE
45" Control Zone Side Mount

PUMP
1500 GPM Waterous CSU

CROSSLAYS, 1.50"
(2) 1.50" Standard Capacity

CROSSLAYS, 2.50"
2.50" Crosslay Not Required

SPEEDLAYS
Speedlays Not Required

GENERATOR
Generator Not Required

Foam System
Husky 3 Single Agent Foam System

Foam Cell
30 Gallon Foam Cell, Not Reduced Water

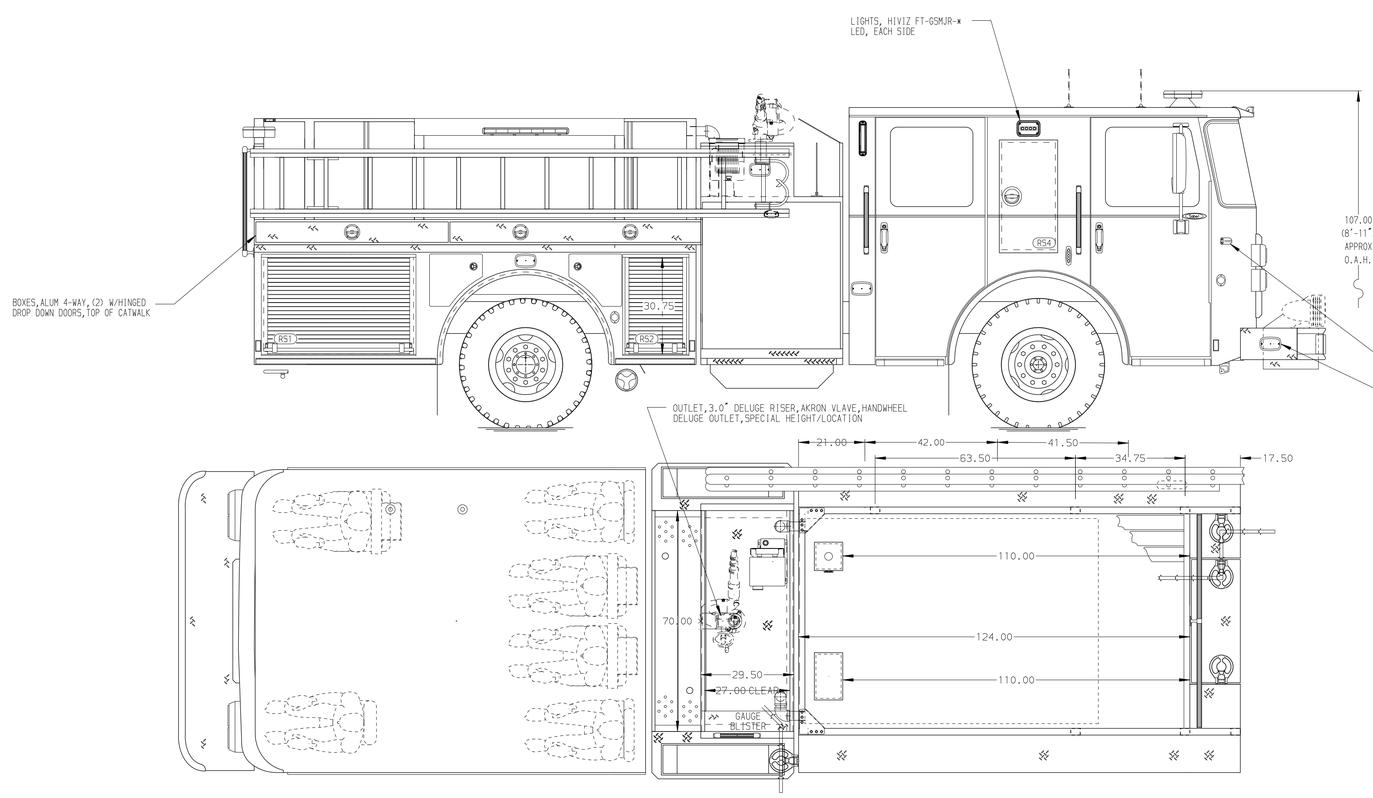

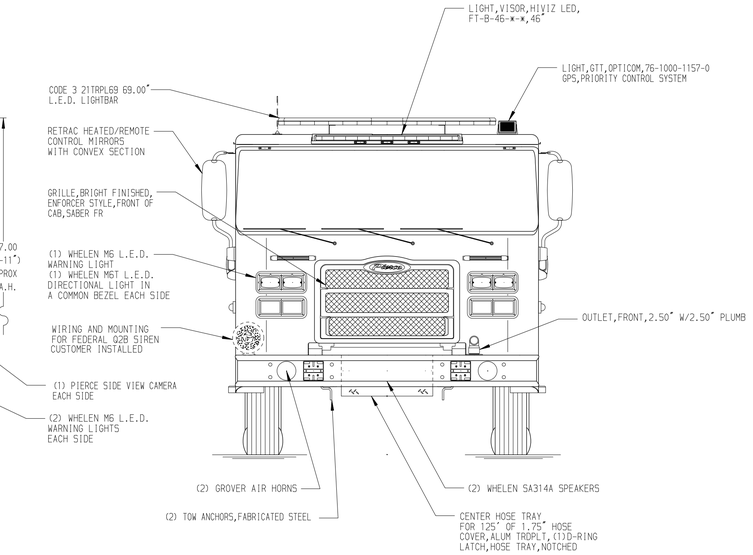

HOSEBED CAPACITY

BED 1
200' OF 2.50" D.J. POLY HOSE

BED 2
1000' OF 4.00" D.J. POLY HOSE

BED 3
200' OF 2.50" D.J. POLY HOSE

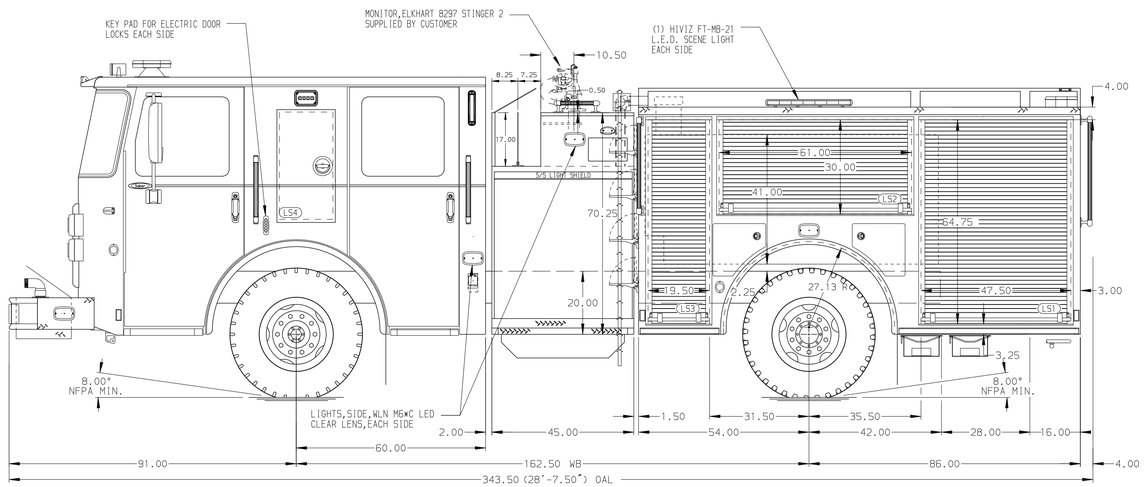

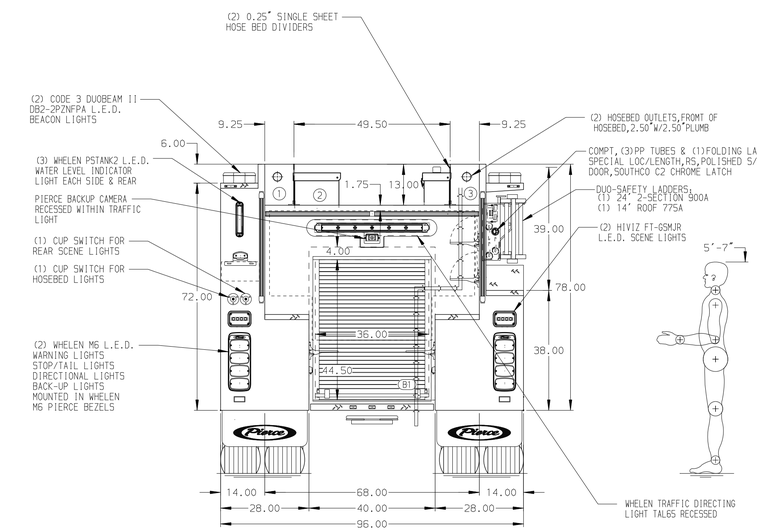

MAXIMUM O.A.H. 108.00"

NOTE
DIMENSIONS SHOWN ARE APPROXIMATE AND ARE SUBJECT TO MINOR DEVIATIONS AS MAY OCCUR OR BE NECESSARY IN CONSTRUCTION.
MINOR DETAILS NOT SHOWN.

REV	DATE	BY	CH
V	17SEP21	RHU	AJA
V	08JUL21	JAF	AJA
V	25MAY21	JLA	AJA

CHASSIS DATA
MAKE: PIERCE
MODEL: SABER FR

Pierce MANUFACTURING INC.

TITLE: Pierce Pumper Approval Drawing
FOR: Destin Fire Control District
DWG NO.: 36508AD

JOB NO. 36508
SCALE 1:24
DATE
DRAWN BY MMF 21APR21
CHECKED BY COL 22APR21
SHEET SIZE D
SHEET NO. 1 OF 1

View File Created 17-SEP-2021 11:06:37