RIGHT SIDE COMPARTMENTS CONTAIN THE FOLLOWING:

COMPARTMENT RS1 CONTAINS:
- (1) STD DEPTH FLOOR MOUNTED TRAY
- (1) STD DEPTH ADJ SHELF
- (1) 20A,120V 6-PLACE RECEPTACLE
-
-

COMPARTMENT RS2 CONTAINS:
- (1) 1/2 DEPTH ADJ SLIDE OUT/TILT TRAY
- (1) 42"DP FLOOR MOUNTED SLIDE OUT TRAY
-
-

COMPARTMENT RS3 CONTAINS:
- (2) 2-WAY ADJ SLIDE OUT TOOLBOARDS
- (1) HORIZONTAL FLOOR EXTENSION
-
-

COMPARTMENT RS4 CONTAINS:
- CHASSIS BATTERIES ON SLIDE OUT TRAY
- (1) 42"DP WALL MTD SLIDE OUT TOOLBOARD
- (1) 1/2 DEPTH ADJ SLIDE OUT/TILT TRAY
- (1) TRANSVERSE VERTICAL DIVIDER
- (1) HORIZONTAL FLOOR EXTENSION
- (1) STOKES BASKET RACK
- (1) RACK FOR 4 AIR BAGS
-

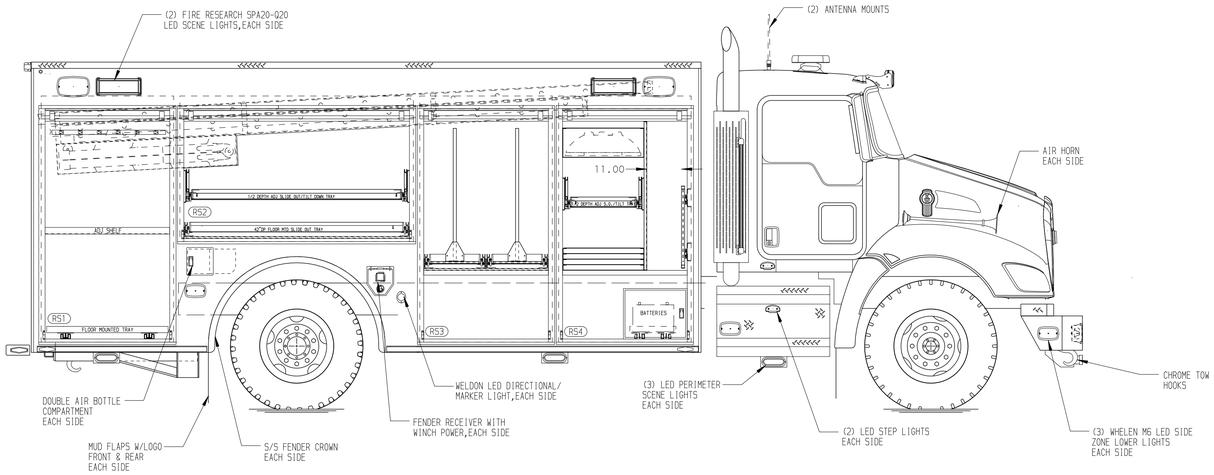

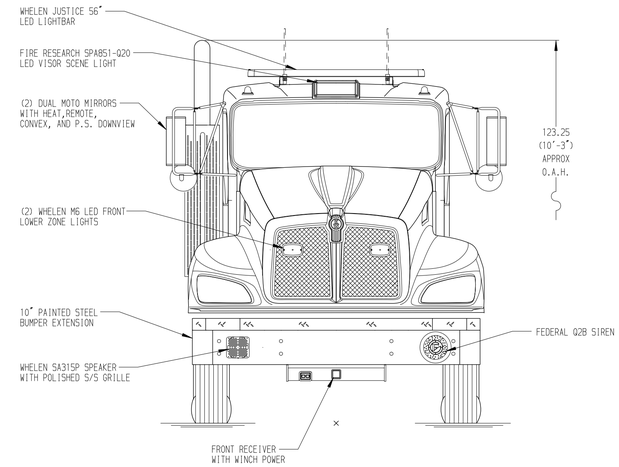

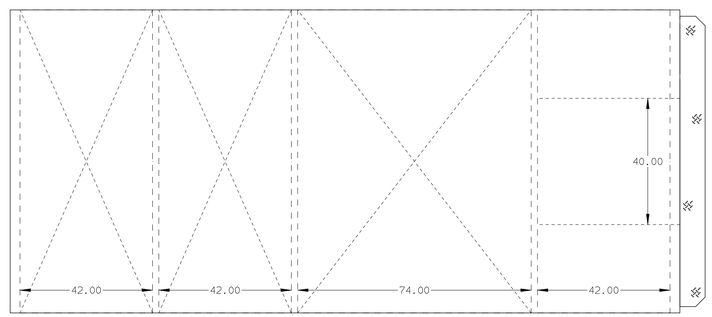

REAR COMPARTMENT CONTAINS THE FOLLOWING:

COMPARTMENT B1 CONTAINS:
- (1) RACK FOR THE FOLLOWING:
  - (1) LITTLE GIANT LADDER
  - (2) PIKE POLES
  - (1) 24'2-SECTION LADDER
  - (1) 16' ROOF LADDER
  - (1) 10' FOLDING LADDER
- (1) 38"DP FLOOR MOUNTED SLIDE OUT TRAY
- (1) 38"DP ADJ SLIDE OUT/TILT TRAY
-
-
-
-
-

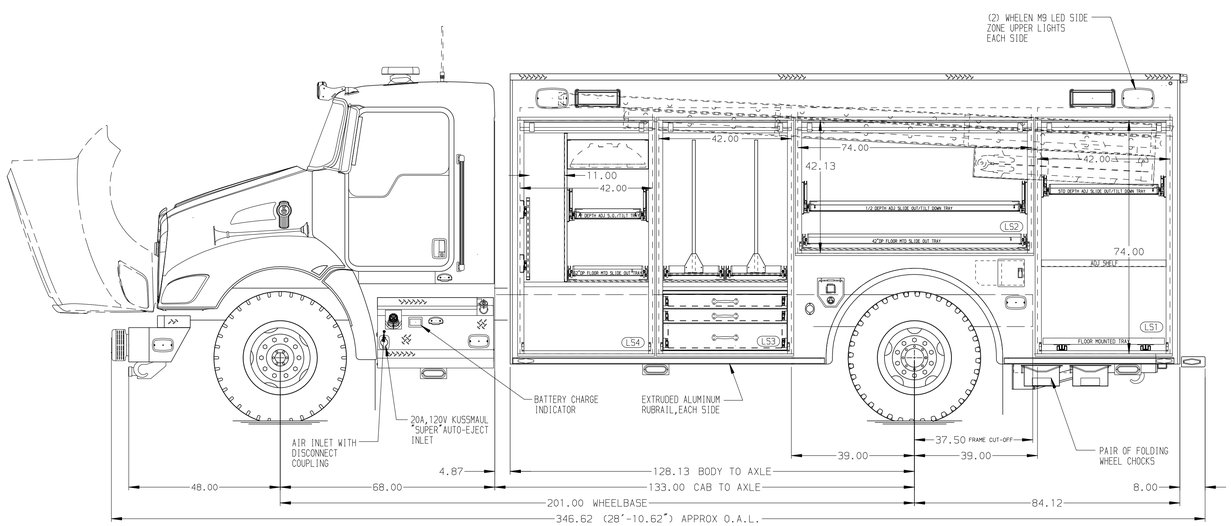

LEFT SIDE COMPARTMENTS CONTAIN THE FOLLOWING:

COMPARTMENT LS1 CONTAINS:
- (1) STD DEPTH FLOOR MOUNTED TRAY
- (1) STD DEPTH ADJ SHELF
- (1) STD DEPTH ADJ SLIDE OUT/TILT TRAY
-
-
-
-
-

COMPARTMENT LS2 CONTAINS:
- (1) 1/2 DEPTH ADJ SLIDE OUT/TILT TRAY
- (1) 42"DP FLOOR MOUNTED SLIDE OUT TRAY
-
-

COMPARTMENT LS3 CONTAINS:
- (2) 2-WAY ADJ SLIDE OUT TOOLBOARDS
- (1) 3-DRAWER SLIDE OUT TOOL DRAWER
- (1) HORIZONTAL FLOOR EXTENSION
-
-
-
-
-

COMPARTMENT LS4 CONTAINS:
- (1) 42"DP WALL MTD SLIDE OUT TOOLBOARD
- (1) 1/2 DEPTH ADJ SLIDE OUT/TILT TRAY
- (1) TRANSVERSE VERTICAL DIVIDER
- (1) HORIZONTAL FLOOR EXTENSION
- (1) STOKES BASKET RACK
- (1) 62"DP FLOOR MOUNTED TRAY
-

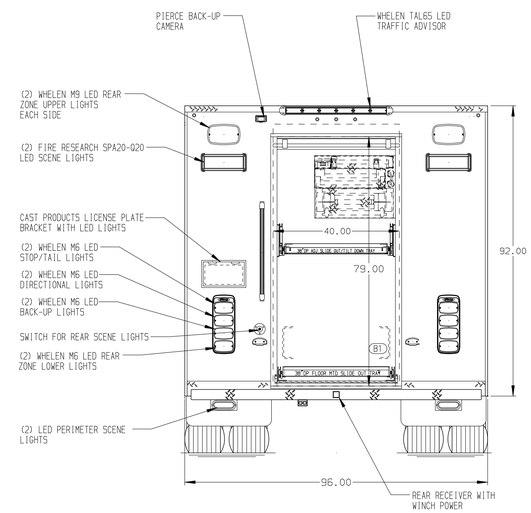

NOTE

DIMENSIONS SHOWN ARE APPROXIMATE AND ARE SUBJECT TO MINOR DEVIATIONS AS MAY OCCUR OR BE NECESSARY IN CONSTRUCTION.
MINOR DETAILS NOT SHOWN.

NOTES:
1. WARN #9,000 PORTABLE WINCH
2. PULL-STRAPS ON ALL BODY ROLL-UP DOORS
3. PIERCE LED LIGHTS IN ALL BODY AND HATCH COMPARTMENTS
4. KUSSMAUL PUMP PLUS 1200 CHARGER LOCATED UNDER OFFICER'S SEAT

REV	DATE	BY	CH
V	09AUG21	DHE	AZU
V	18JUN21	DHE	CDK
V	22APR21	DHE	CDK

CHASSIS DATA
MAKE: KENWORTH
MODEL: T370

Pierce MANUFACTURING INC.

TITLE: ENCORE RESCUE VEHICLE 42.42.74.42
FOR: TANGIPAHOA PARISH RURAL FIRE PROTECTION DISTRICT #2 BID #274 LANCE BOUEY
DWG NO.: 36527AD

JOB NO.	36527
SCALE	1:24
DATE	
DRAWN BY	DHE 13APR21
CHECKED BY	CDK 13APR21
SHEET SIZE	D
SHEET NO.	1 OF 1

View File Created 09-AUG-2021 08:10:53