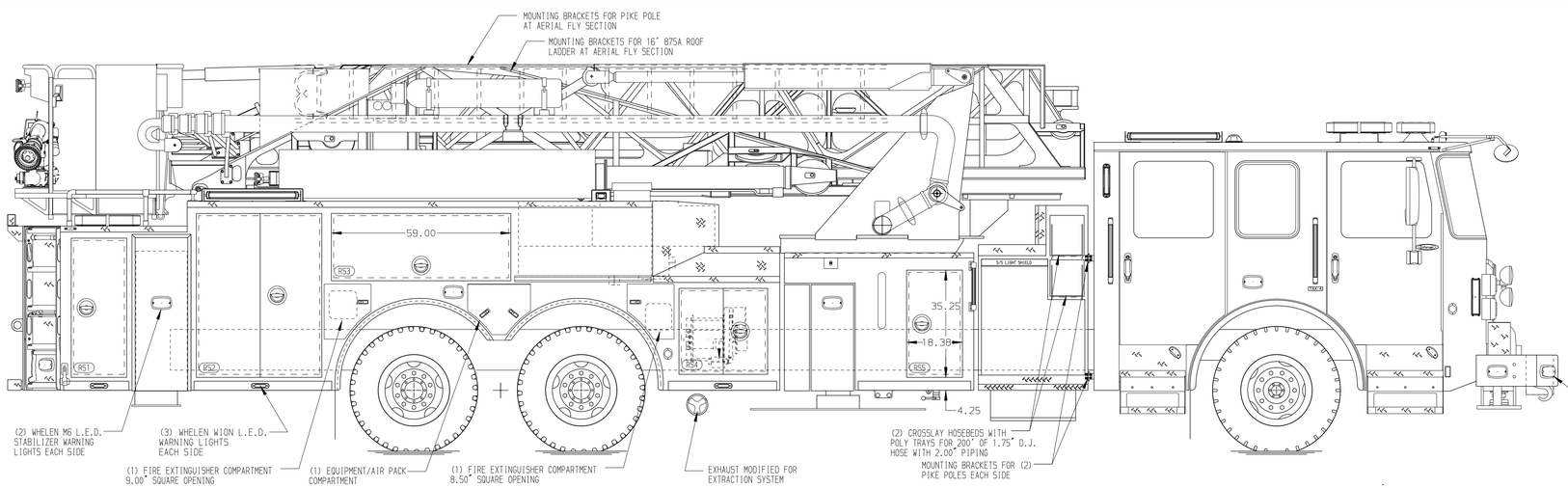

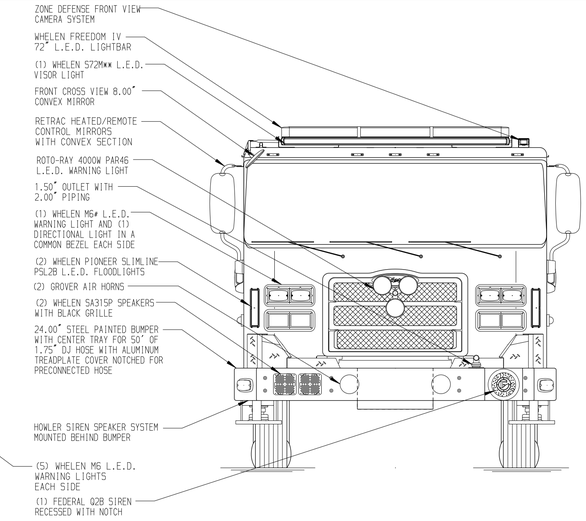

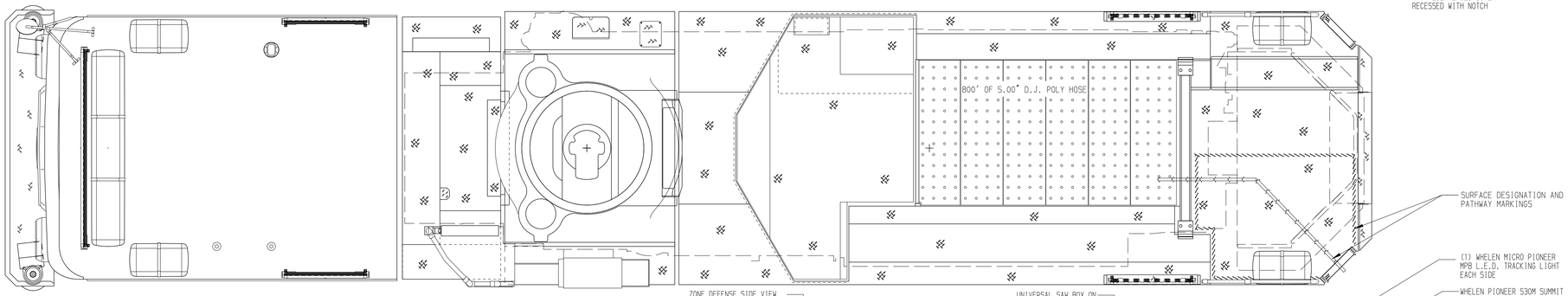

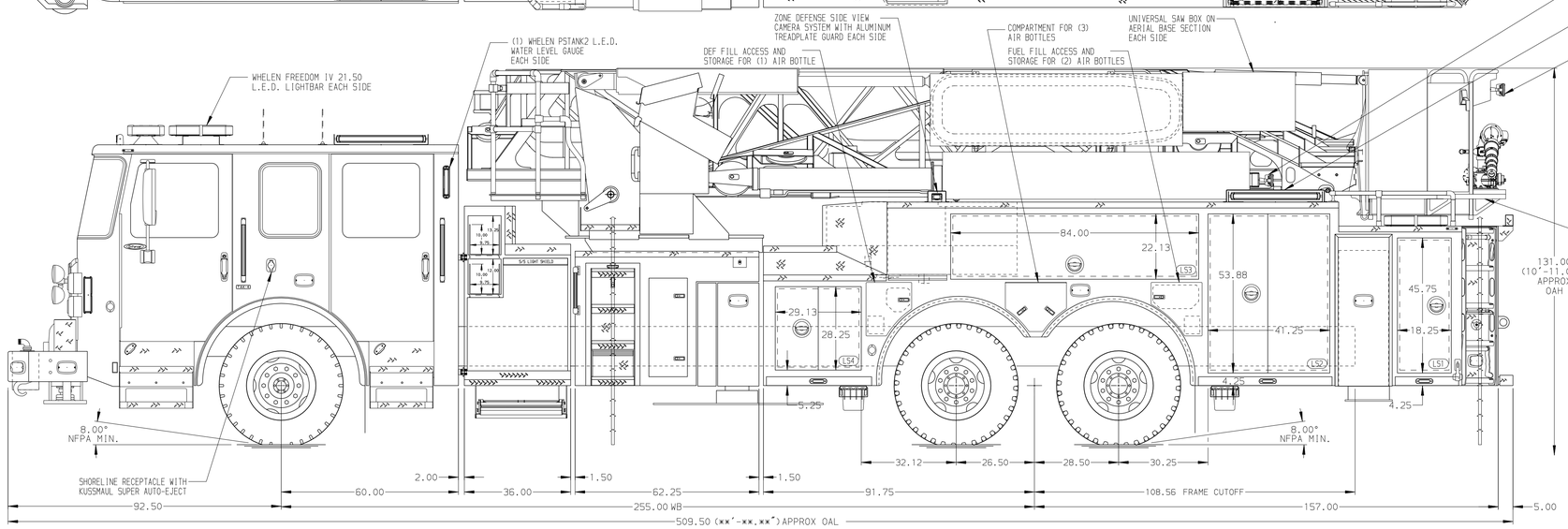

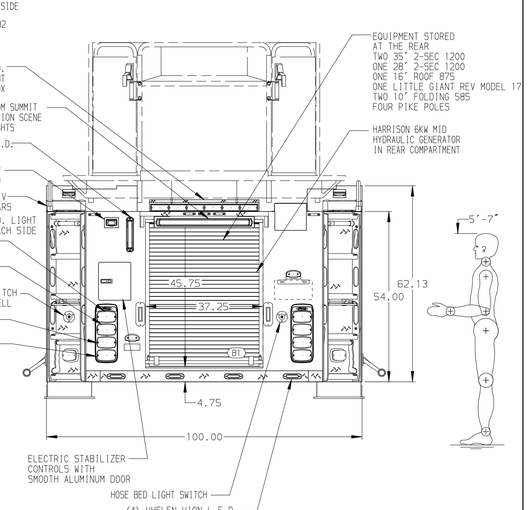

ALUMINUM BODY

SIDE ROLL AND FRONTAL IMPACT PROTECTION

NOTE

DIMENSIONS SHOWN ARE APPROXIMATE AND ARE SUBJECT TO MINOR DEVIATIONS AS MAY OCCUR OR BE NECESSARY IN CONSTRUCTION.
MINOR DETAILS NOT SHOWN.

1. BATTERY CHARGER LOCATED BEHIND DRIVER SEAT
2. BATTERY CHARGER INDICATOR LOCATED ON DRIVER'S SEAT RISER
3. L.E.D. LIGHT STRIPS WITH STAINLESS STEEL PROTECTIVE COVER LOCATED IN HOSE BED
4. EIGHT ADJUSTABLE FULL WIDTH/FULL DEPTH SHELVES IN COMPARTMENT PER ORDER
5. ONE SWING-OUT ALUMINUM TOOL BOARD IN COMPARTMENT PER ORDER
6. ONE VERTICAL PARTITION IN COMPARTMENT PER ORDER
7. ALUMINUM PEGBOARD ON BACK WALL OF COMPARTMENT PER ORDER
8. ALUMINUM PEGBOARD ON SIDE WALL OF COMPARTMENT PER ORDER
9. CIRCUIT BREAKER PANEL LOCATED IN COMPARTMENT PER ORDER
10. SUB FEED CIRCUIT BREAKER PANEL LOCATED IN COMPARTMENT PER ORDER
11. FOUR 120V DUPLEX RECEPTACLES IN CAB PER ORDER
12. TWO 120V DUPLEX RECEPTACLES IN COMPARTMENT PER ORDER
13. ONE HANNAY ELECTRIC REWIND CORD REEL MODEL 1618-17-18 LOCATED IN COMPARTMENT PER ORDER WITH 200' OF 10/3 CABLE
14. TECNIQ L.E.D. RING STYLE LIGHTING ON AERIAL LADDER SECTIONS PER SHOP ORDER
15. DC POWER TO AERIAL BASKET
16. 2-WAY INTERCOM SYSTEM BETWEEN AERIAL TIP OR PLATFORM AND TURNTABLE
17. BREATHING AIR TO AERIAL TIP

REV	DATE	BY	CH
V	07JAN22	JGA	AST
V	06JAN22	JGA	AST
V	200CT21	JGA	CRI
V	150CT21	JGA	ZCH

CHASSIS DATA
MAKE: PIERCE
MODEL: ENFORCER

Pierce MANUFACTURING INC.

TITLE: 100' ASCENDANT AERIAL TOWER AND BODY ASSEMBLY
300 GALLONS WATER

FOR: IOWA CITY FIRE DEPARTMENT
IOWA CITY, IA

DWG NO.: 36560AD

JOB NO.	36560
SCALE	1:24
DATE	
DRAWN BY	JGA 040CT21
CHECKED BY	CRI 050CT21
SHEET SIZE	D
SHEET NO.	1 OF 1

View File Created 07-JAN-2022 14:48:13