RIGHT SIDE COMPARTMENTS CONTAIN THE FOLLOWING:

COMPARTMENT RS1 CONTAINS:
- (2) STD DEPTH ADJ SHELVES
- (1) #750 FLOOR MOUNTED TRAY
- (1) ELECTRIC CORD REEL WITH 200' OF 12/3 YELLOW CORD
-
-

COMPARTMENT RS2 CONTAINS:
- (1) STD DEPTH SLIDE OUT/TILT TRAY
-
-
-

COMPARTMENT RS3 CONTAINS:
- (1) SWING OUT TOOLBOARD
-
-
-

COMPARTMENT RS4 CONTAINS:
- (1) #750 FLOOR MOUNTED TRAY
- (2) STD DEPTH ADJ SHELVES
-
-
-
-
-

COMPARTMENT RS5 CONTAINS:
- (1) CAB LIFT CONTROLLER
- (1) HORIZONTAL FLOOR EXTENSION
- (1) #750 FLOOR MOUNTED TRAY
- (1) VERTICAL COMPARTMENT DIVIDER
- (1) 2-WAY ADJ SLIDE OUT TRAY
- (1) 2-WAY ADJ SLIDE OUT TOOLBOARD
-
-

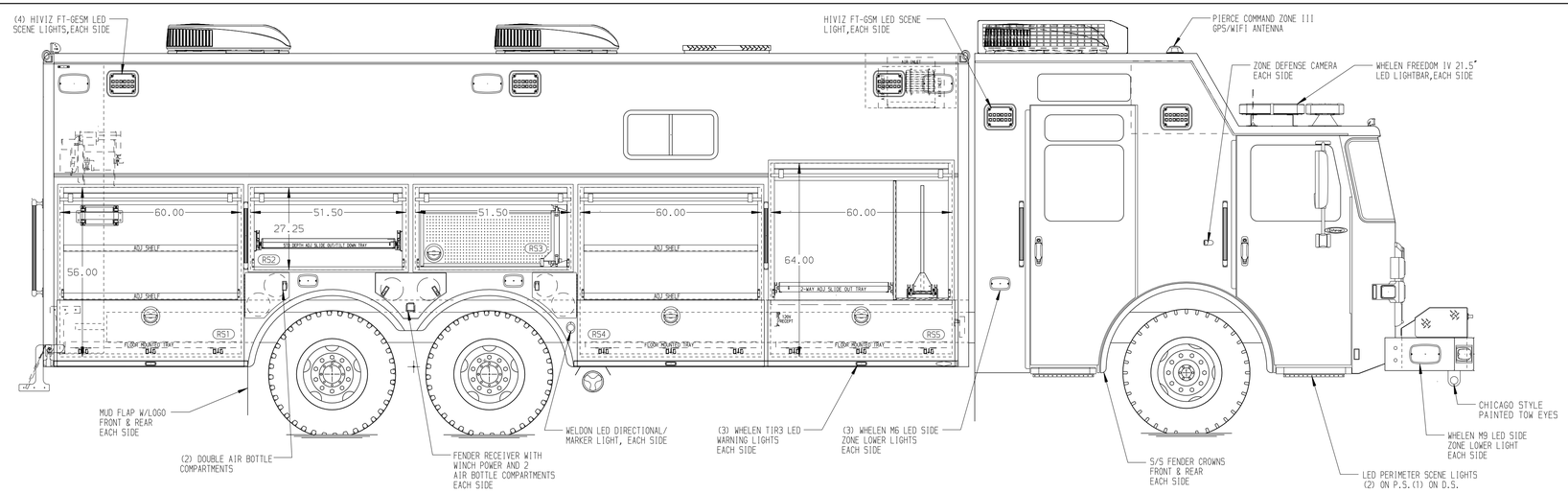

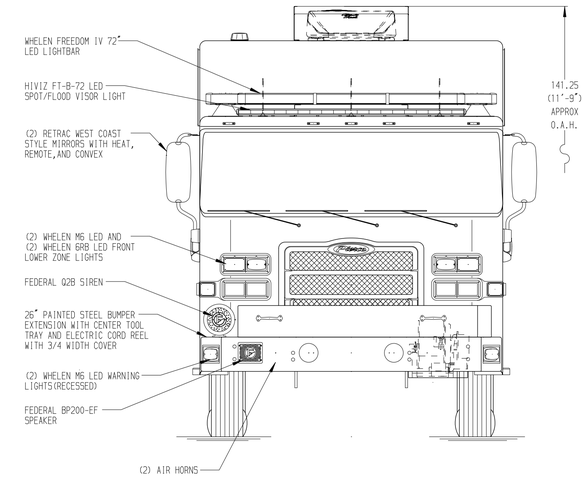

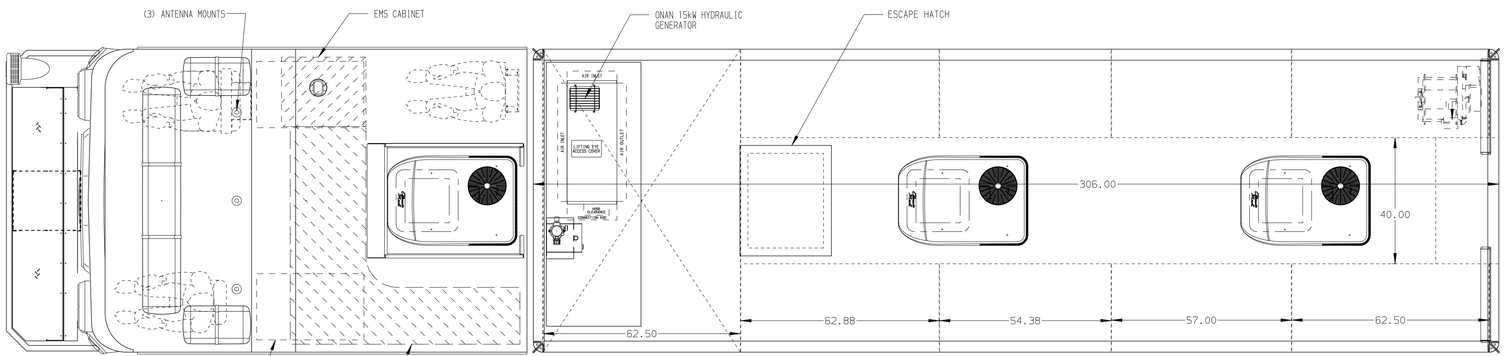

LEFT SIDE COMPARTMENTS CONTAIN THE FOLLOWING:

COMPARTMENT LS1 CONTAINS:
- (1) RACK FOR 30 SCBA BOTTLES
-
-
-

COMPARTMENT LS2 CONTAINS:
- (1) CIRCUIT BREAKER PANEL
- (1) GENERATOR METER PANEL
- (2) SUB FEED BOXES
- (1) VERTICAL COMPARTMENT DIVIDER
-

COMPARTMENT LS3 CONTAINS:
- (1) SWING OUT TOOLBOARD
-
-
-

COMPARTMENT LS4 CONTAINS:
- (1) #750 FLOOR MOUNTED TRAY
- (2) STD DEPTH ADJ SHELVES
-
-
-

COMPARTMENT LS5 CONTAINS:
- (1) VERTICAL COMPARTMENT DIVIDER
- (1) #750 FLOOR MOUNTED TRAY
- (1) 2-WAY ADJ SLIDE OUT TRAY
- (1) 2-WAY ADJ SLIDE OUT TOOLBOARD
- (1) HORIZONTAL FLOOR EXTENSION
- (1) RACK FOR 8 AIR BAGS
-
-

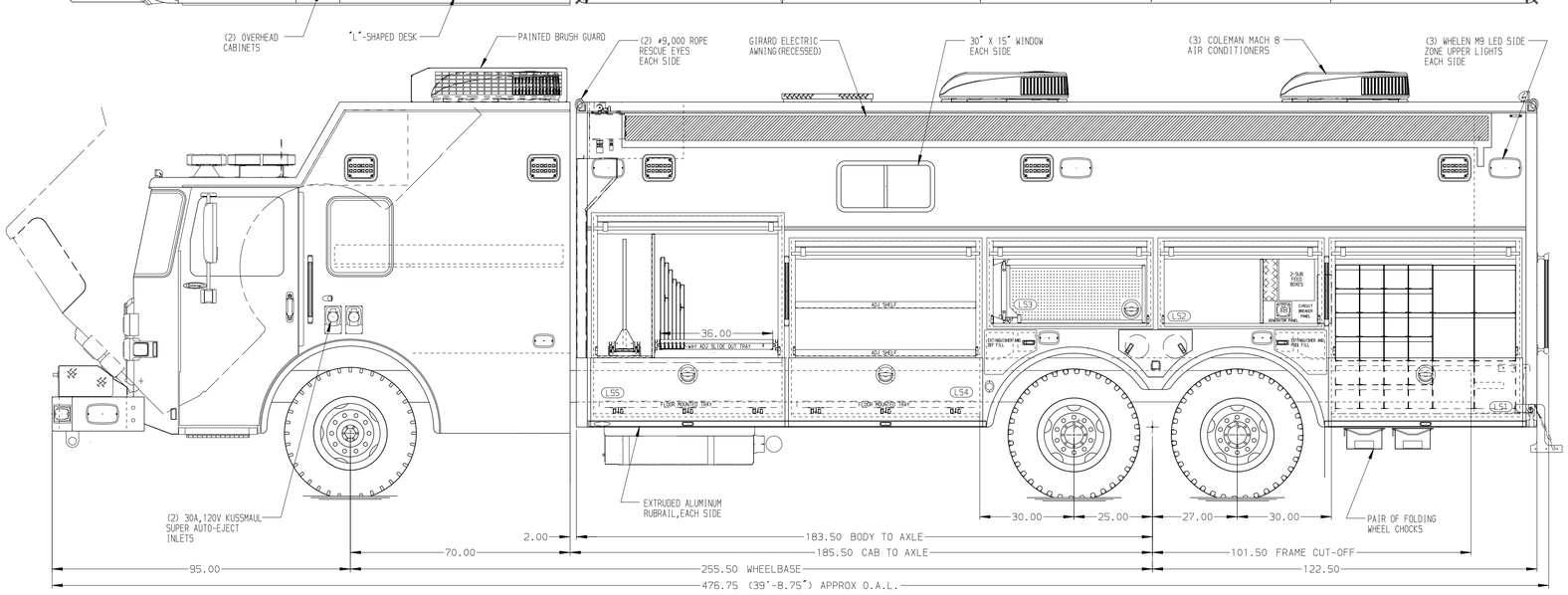

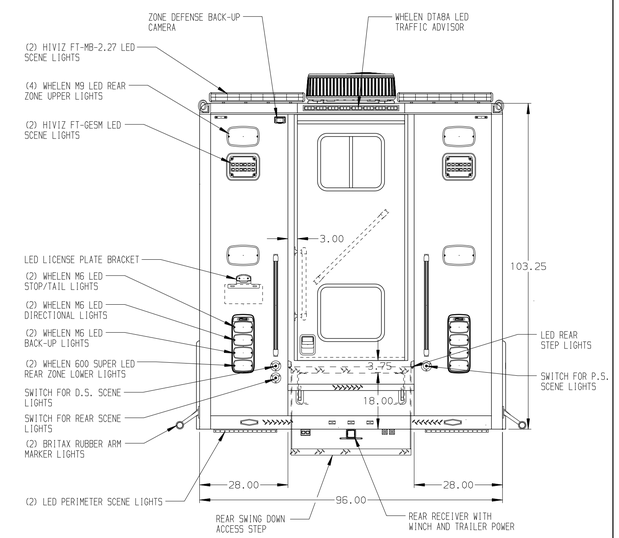

NOTE

DIMENSIONS SHOWN ARE APPROXIMATE AND ARE SUBJECT TO MINOR DEVIATIONS AS MAY OCCUR OR BE NECESSARY IN CONSTRUCTION.
MINOR DETAILS NOT SHOWN.

NOTES:
1. WARN #9,000 PORTABLE RECEIVER STYLE WINCH
2. POLISHED S/S SCUFFPLATES ON CAB AND CREW CAB DOOR JAMBS
3. FLOOR IN CAB AND COMMAND CAB TO BE PADDED RUBBER
4. FIRECOM 5200 INTERCOM SYSTEM
5. BATTERY CHARGE INDICATOR LOCATED ON DRIVER'S SEAT RISER
6. BRUSHED S/S SCUFFPLATES ON REAR ENTRY DOOR
7. PIERCE LED STRIP LIGHTS IN ALL BODY COMPARTMENTS
8. AIR INLET/OUTLET WITH DISCONNECT FITTING LOCATED IN DRIVER'S STEP WELL

FRONTAL IMPACT PROTECTION

CLEAR DOOR WIDTH KEY	
AMDOR ROLL UP DOORS:	-2 1/4"
GORTITE ROLL UP DOORS:	-2 1/2"
PIERCE DOUBLE LAP DOORS:	-4 1/4"
PIERCE LIFT-UP LAP DOORS:	-1 1/2"
(EX: 60"F-F - 2 1/4"= 57 3/4" CLEAR) (F-F)= FRAME TO FRAME	

REV	DATE	BY	CH
5	17DEC21	DHE	CDK
4	28OCT21	DHE	CDK

CHASSIS DATA	
MAKE	PIERCE
MODEL	EN7024
DWG NO.	36654AD-SH1

Pierce MANUFACTURING INC.

TITLE	HEAVY DUTY RESCUE WALKIN
FOR	DELRAY BEACH FIRE DEPARTMENT BID #804 MIKE SCHNEIDER

JOB NO.	36654
SCALE	1:24
DATE	180CT21
DRAWN BY	DHE
CHECKED BY	AZU
190CT21	
SHEET SIZE	D
SHEET NO.	1 OF 1

View File Created 20-DEC-2021 07:12:38