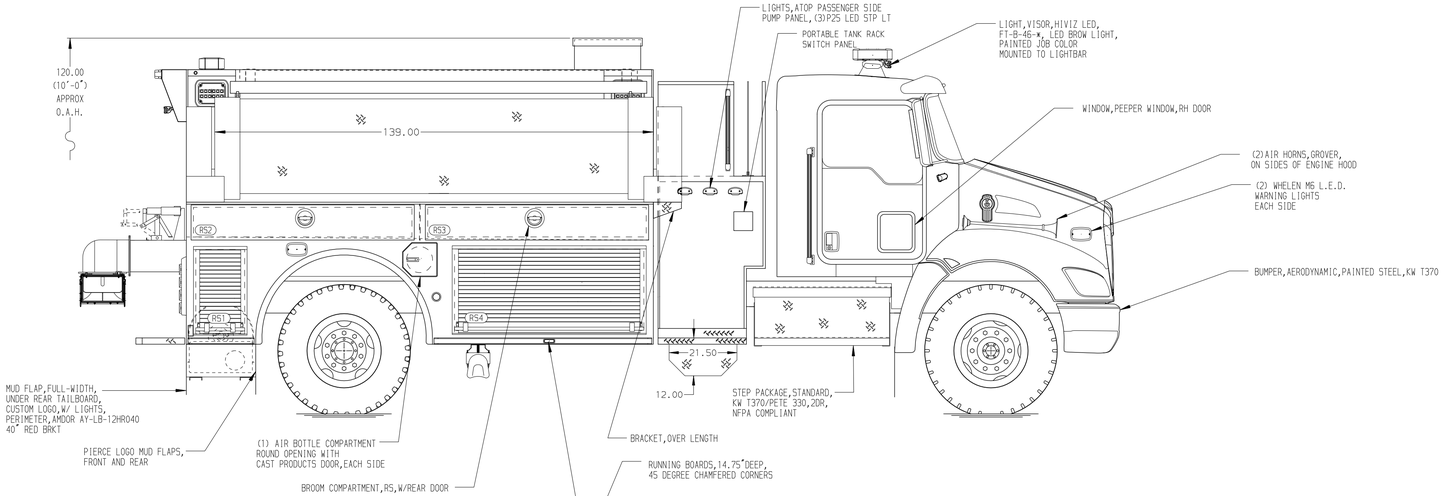

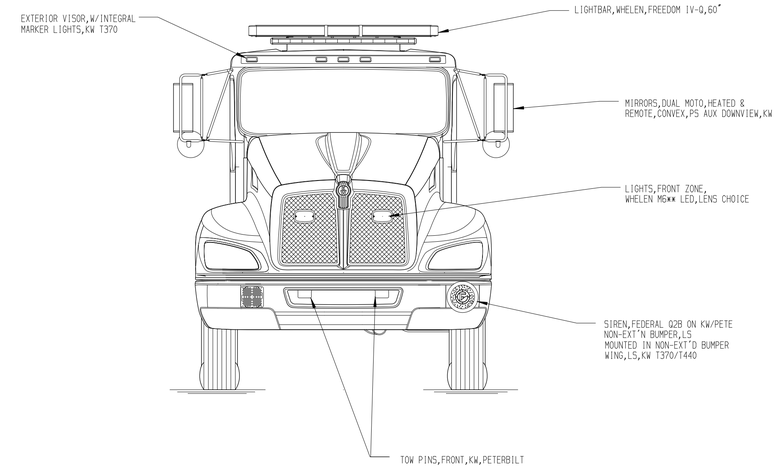

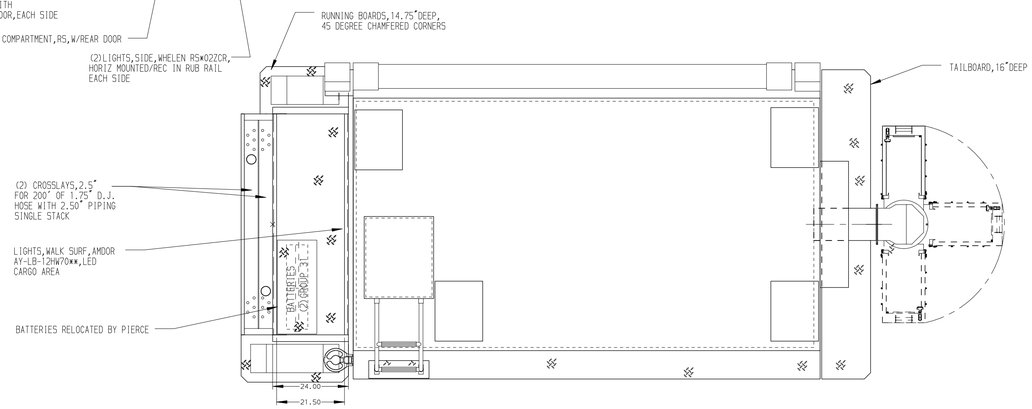

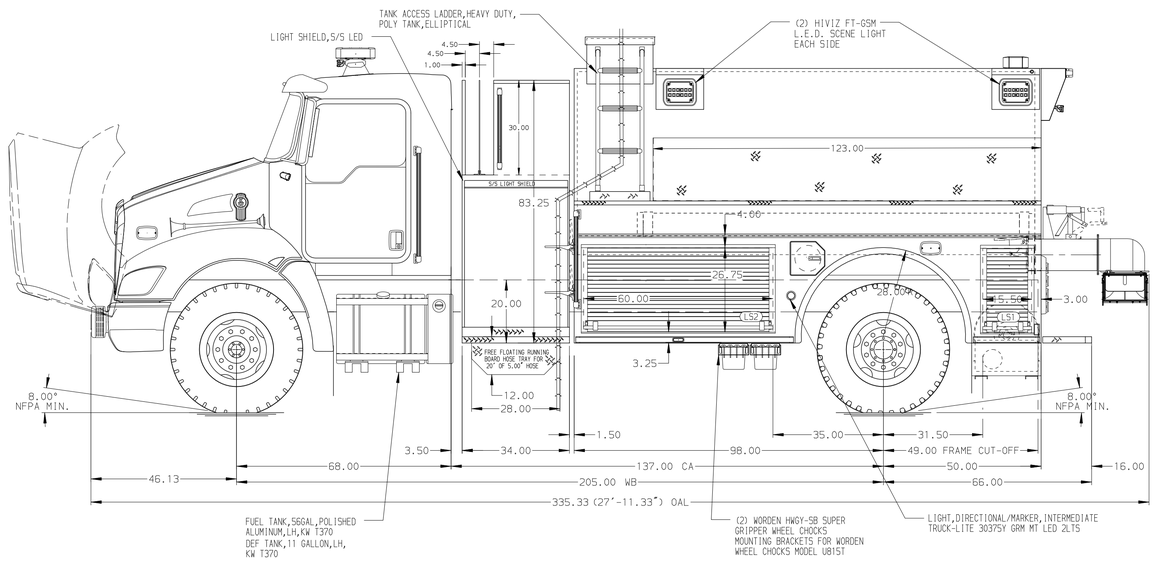

ALUMINUM BODY

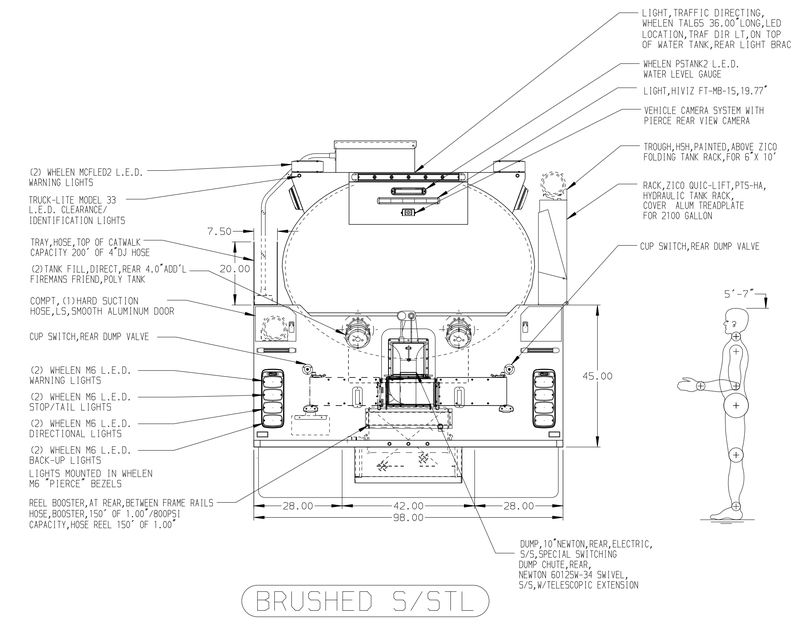

BRUSHED S/STL

NOTE

DIMENSIONS SHOWN ARE APPROXIMATE AND ARE SUBJECT TO MINOR DEVIATIONS AS MAY OCCUR OR BE NECESSARY IN CONSTRUCTION.
MINOR DETAILS NOT SHOWN.

REV	DATE	BY	CH
D	17JAN22	JLA	NAS
C	22NOV21	JLA	NAS
B	18NOV21	JLA	NAS
A	17SEP21	JLA	RWI

CHASSIS DATA
MAKE: KENWORTH
MODEL: T370

Pierce MANUFACTURING INC.
BRADENTON, FLORIDA

TITLE: 1250-D-2000 GALLON POLY ELLIPTICAL 148"BODY 34"SIDE CONTROL,(2)2.5"CROSSLAYS,RS BROOM COMPT

FOR: SHEPHERDS VOLUNTEER FIRE DEPARTMENT MOORESVILLE, NORTH CAROLINA

DWG NO.: 36658AD

JOB NO.	36658
SCALE	1:24
DATE	
DRAWN BY	JAF 30AUG21
CHECKED BY	RWI 31AUG21
SHEET SIZE	D
SHEET NO.	1 OF 1

View File Created 19-JAN-2022 10:41:08