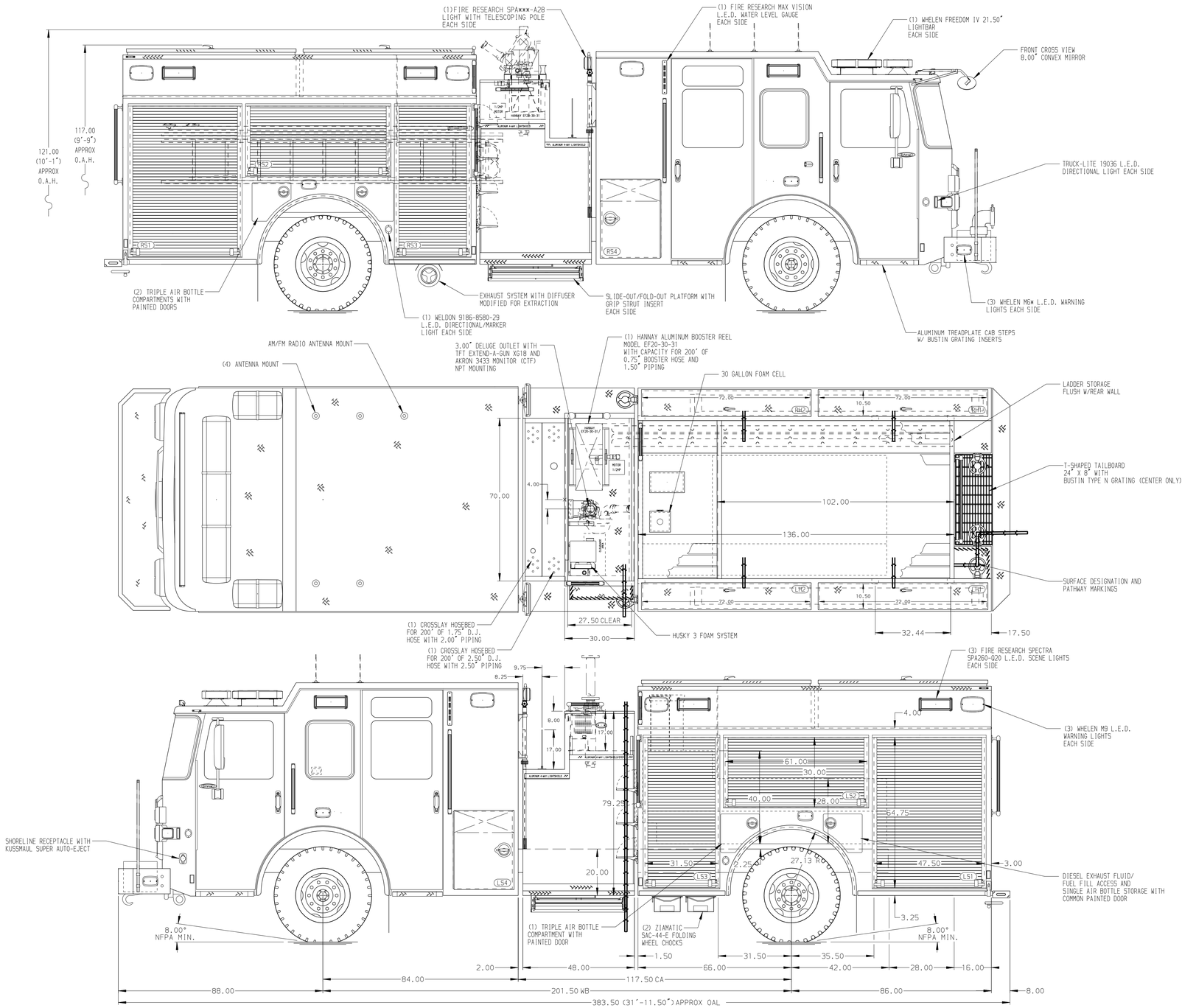

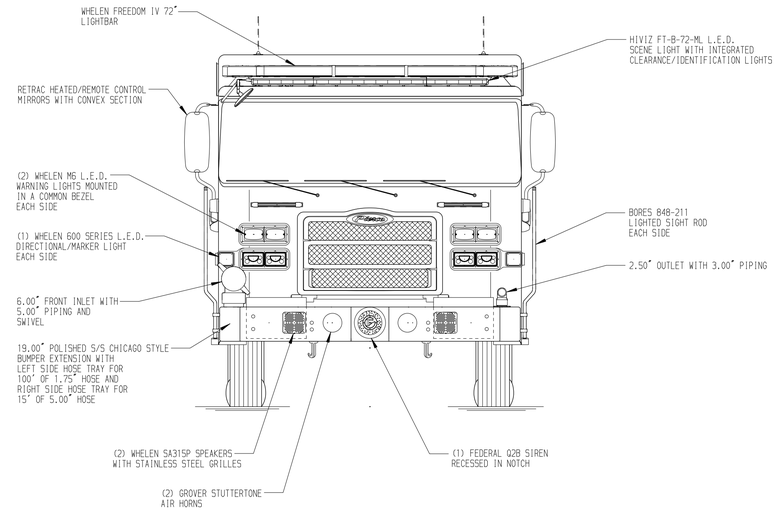

HOSEBED CAPACITIES

1. - 1000' OF 5.00" DJP HOSE
2. - 500' OF 3.00" DJP HOSE
3. - 500' OF 2.50" DJP HOSE
4. - 600' OF 1.75" DJP HOSE

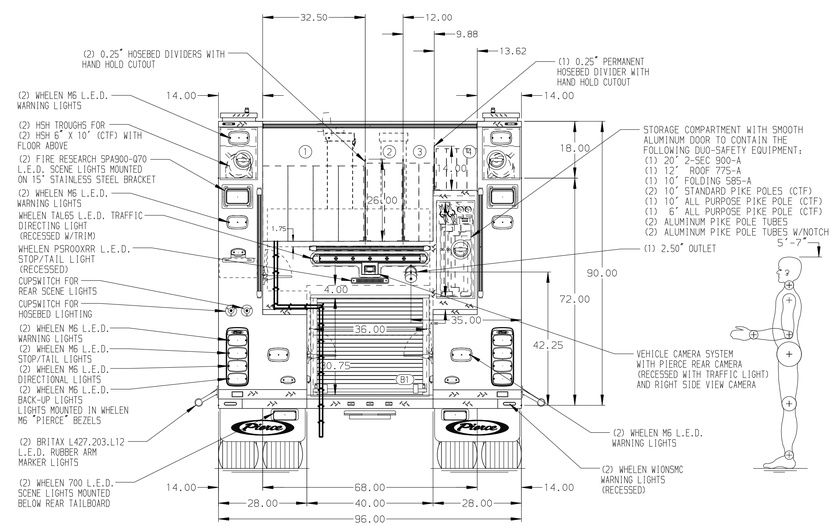

ALUMINUM BODY

FRONTAL IMPACT PROTECTION

NOTE

DIMENSIONS SHOWN ARE APPROXIMATE AND ARE SUBJECT TO MINOR DEVIATIONS AS MAY OCCUR OR BE NECESSARY IN CONSTRUCTION.
MINOR DETAILS NOT SHOWN.

1. ONSPOT AUTOMATIC TIRE CHAINS TO BE PROVIDED AT REAR
2. AIR INLET/OUTLET WITH DISCONNECT FITTING AND 1/4 TURN VALVE LOCATED IN DRIVER'S SIDE STEPWELL
3. ALUMINUM 4-WAY ON CAB ROOF
4. BATTERY CHARGER/COMPRESSOR LOCATED BEHIND DRIVER'S SEAT
5. BATTERY CHARGER INDICATOR BEHIND DRIVER'S SEAT DISPLAYED THROUGH WINDOW
6. DUAL L.E.D. LIGHT STRIPS LOCATED IN HOSE BED
7. DUAL L.E.D. LIGHT STRIPS LOCATED IN CARGO AREA
8. DUAL L.E.D. LIGHT STRIPS LOCATED IN HATCH COMPARTMENTS

REV	DATE	BY	CH
7	12JAN22	SAM	CSH
6	11NOV21	SAM	PHA

CHASSIS DATA
MAKE: PIERCE
MODEL: ENFORCER

Pierce MANUFACTURING INC.

TITLE: 2000-D-530P, 500G WATER W/30G FOAM, 152" FH FDLER (2) CROSSLAYS, LADDERS BTWN TANK & SS, DELUGE
FOR: OSSINING FIRE DEPARTMENT, OSSINING, NEW YORK
DWG NO.: 36694AD-SH1

JOB NO.	36694
SCALE	1:24
DATE	
DRAWN BY	SAM 08NOV21
CHECKED BY	PHA
SHEET SIZE	D
SHEET NO.	1 OF 2

View File Created 12-JAN-2022 10:43:54