Pumper, PUC

BODY
Pumper, PUC, Aluminum

CHASSIS
Enforcer Chassis, PUC

CHASSIS

AXLE,FRONT,CUSTOM
18,000 Lb TAK-4 Axle

AXLE,REAR
27,000 Lb Meritor Axle

ENGINE
450 HP Cummins L9 Engine

TRANSMISSION
Allison 5th Gen, 3000 EVS P

BUMPER
19" Extended Stainless Steel

CAB
7010 Enforcer Cab, PUC

BODY

WATER TANK
750 Gallon Poly Water Tank

COMPT,PUMPER,REAR
33.50" FF Rollup Rear Compt w/Tailboard, PUC

COMPT,PUMPER,LEFT SIDE
189" Rollup Full Height & Depth Front & Rear, PUC

COMPT,PUMPER,RIGHT SIDE
189" Rollup Full Height & Depth Front & Rear, PUC

FIRE SUPPRESSION

PUMPHOUSE
Control Zone, PUC

PUMP
1500 GPM Pierce PUC

CROSSLAYS,1.50"
(2) 1.50", Poly Trays, 200'

CROSSLAYS,2.50"
(1) 2.50", Poly Tray, 200'

GENERATOR
Generator Not Required

Foam System
Husky 3 Foam System

Foam Cell
20 Gal Foam Reduce Water

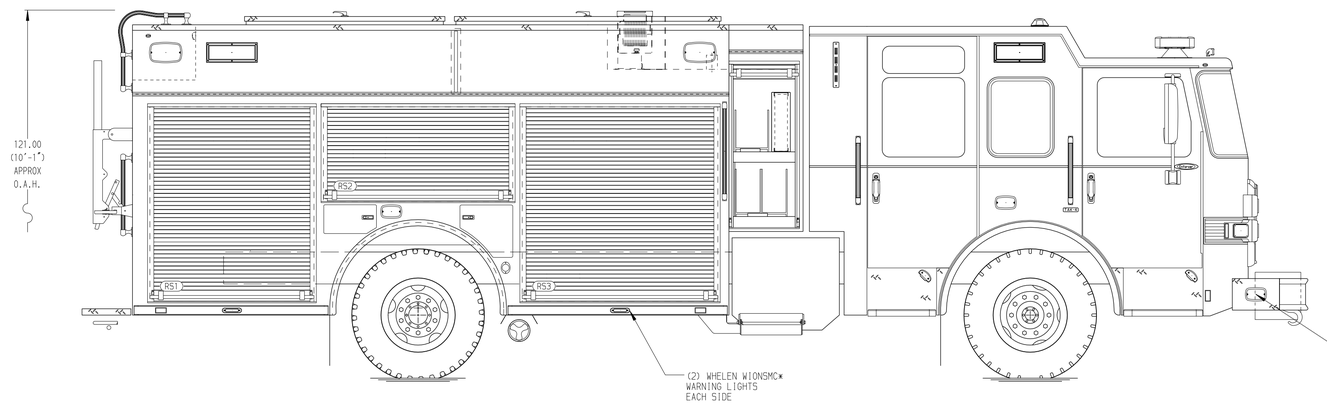

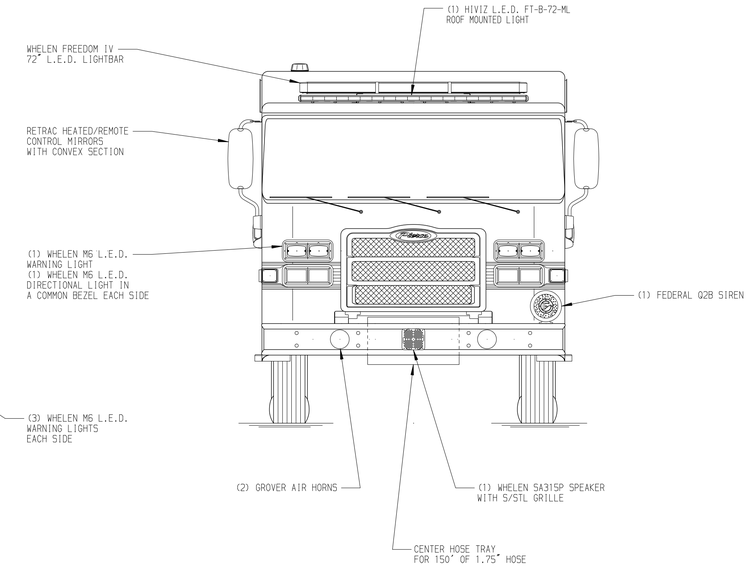

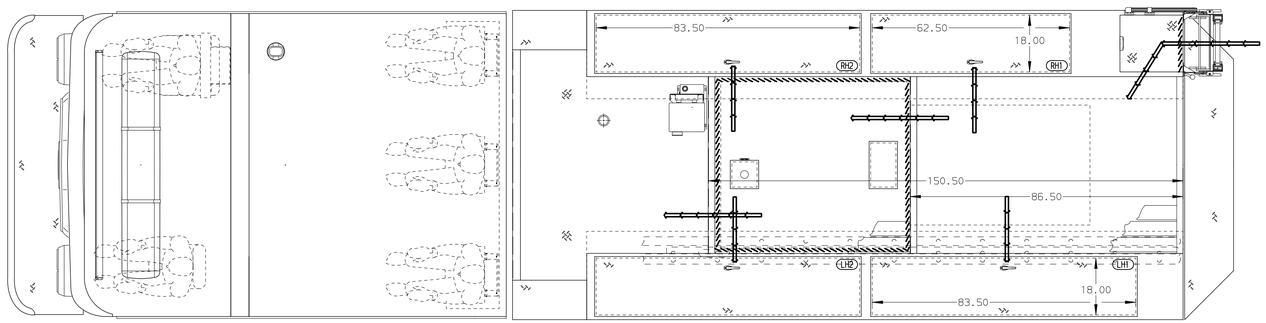

HOSEBED CAPACITY
BED 1
1000' OF 5.00" D.J. POLY HOSE
BED 2
600' OF 2.50" D.J. POLY HOSE

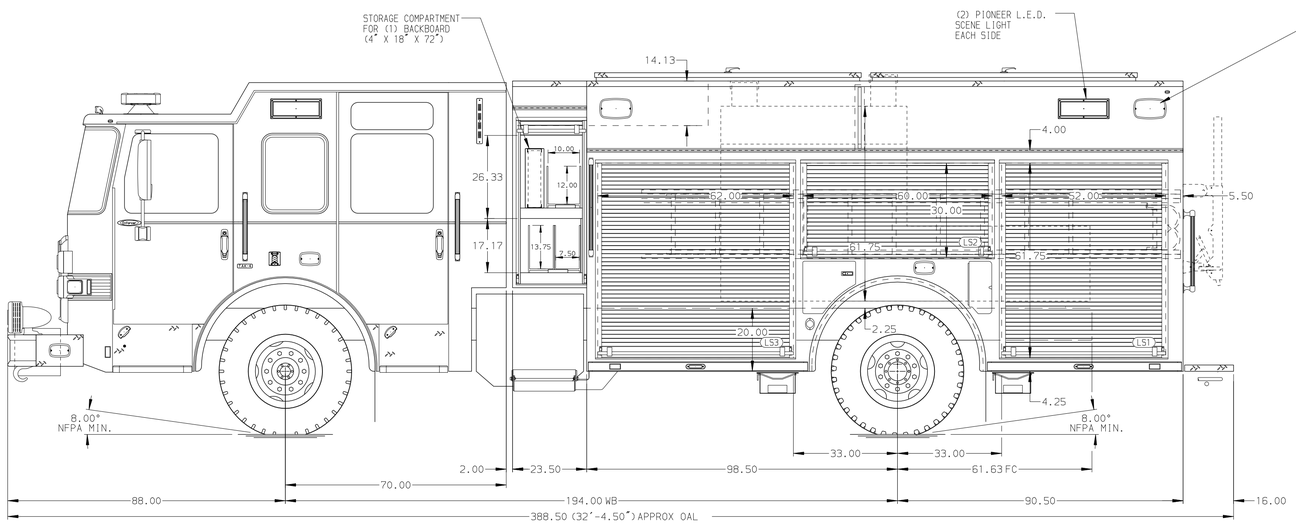

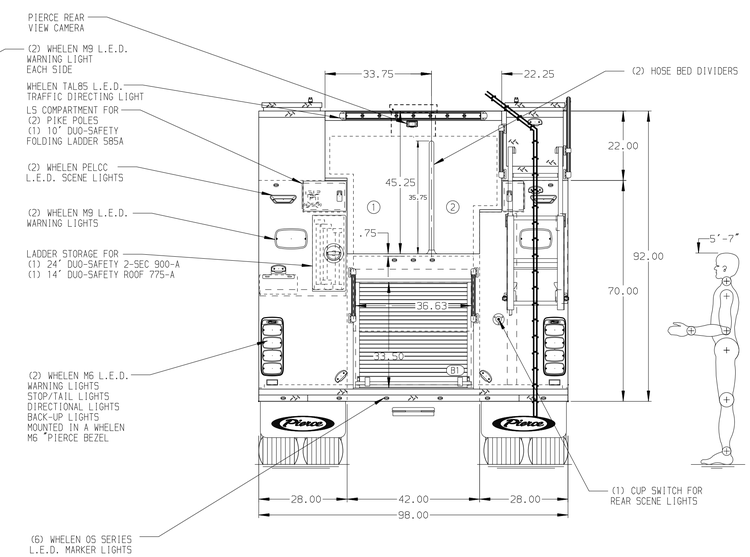

CUSTOMER APPROVAL
APPROVED BY: _____
DATE: _____

Pierce MANUFACTURING INC.

NOTE
DIMENSIONS SHOWN ARE APPROXIMATE AND ARE SUBJECT TO MINOR DEVIATIONS AS MAY OCCUR OR BE NECESSARY IN CONSTRUCTION.
MINOR DETAILS NOT SHOWN.

1. ONE 1.50 OUTLET WITH 2.00 PIPING AND SWIVEL LOCATED IN CENTER BUMPER TRAY
2. BLUE SEA SURE EJECT SHORELINE LOCATED ON DRIVER SIDE OF THE CAB
3. AIR INLET WITH DISCONNECT COUPLING IN THE DRIVER SIDE STEPWELL
4. BATTERY CHARGER LOCATED IN COMPARTMENT PER SHOP ORDER
5. BATTERY CHARGE INDICATOR LOCATED ON THE DRIVER SIDE SEAT RISER
6. FOUR ADJUSTABLE SHELVES IN COMPARTMENTS PER SHOP ORDER
7. TWO FLOOR MOUNTED SLIDE-OUT TRAY IN COMPARTMENT PER SHOP ORDER
8. TWO SWING-OUT TOOLBOARDS IN COMPARTMENTS PER SHOP ORDER

REV	DATE	BY	CH
3	04OCT21	COL	MMF
2	13JUL21	COL	THS

CHASSIS DATA
MAKE: PIERCE
MODEL: ENFORCER

TITLE	Pierce PUC Pumper Approval Drawing –	JOB NO.	36718
		SCALE	1:24
		DRAWN BY	COL
		DATE	12MAY21
FOR	Pierce Field Unit Appleton, Wisconsin	CHECKED BY	THS
		DATE	12MAY21
DWG NO.	36718AD	SHEET SIZE	D
		SHEET NO.	1 OF 1

View File Created 04-OCT-2021 12:19:08