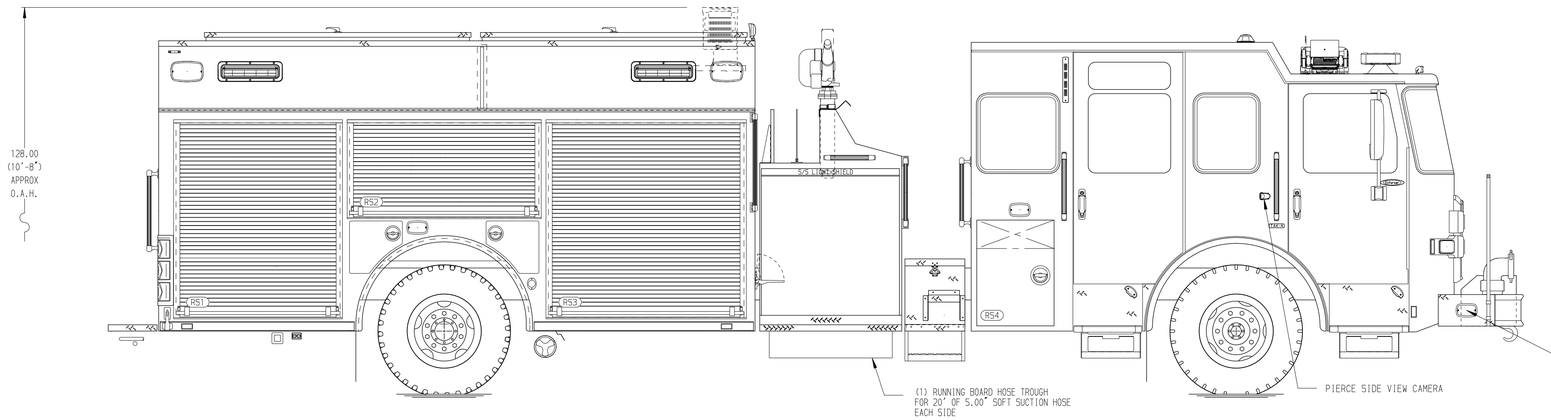

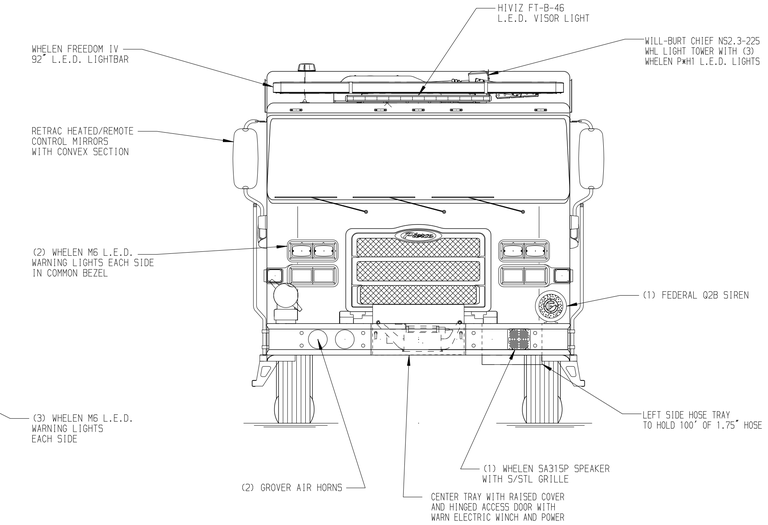

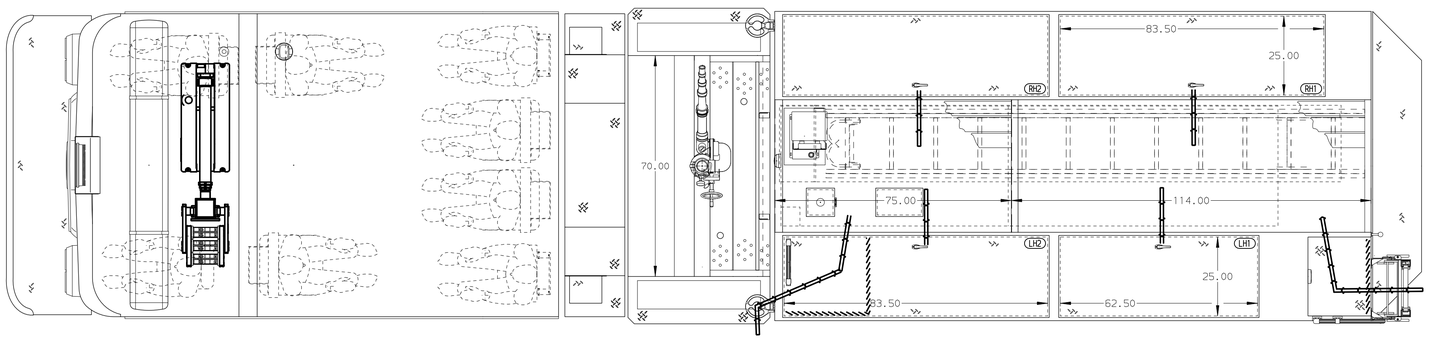

BODY	WATER TANK
Pumper, HDRP, Aluminum	730 Gallon Poly Water Tank
COMPT,LEFT SIDE	Foam System
189" RollUp Full Height & Depth Front & Rear	Husky 3 Single Agent Foam System
COMPT,RIGHT SIDE	Foam Cell
189" RollUp Full Height & Depth Front & Rear	20 Gallon Foam Cell, Reduced Water
COMPT,REAR	
29.50" FF Rollup Rear Compt w/Tailboard	

HOSEBED CAPACITY

BED 1
1000' OF 5.00" D.J. POLY HOSE

BED 2
300' OF 1.75" D.J. POLY HOSE

BED 3
250' OF 2.50" D.J. POLY HOSE

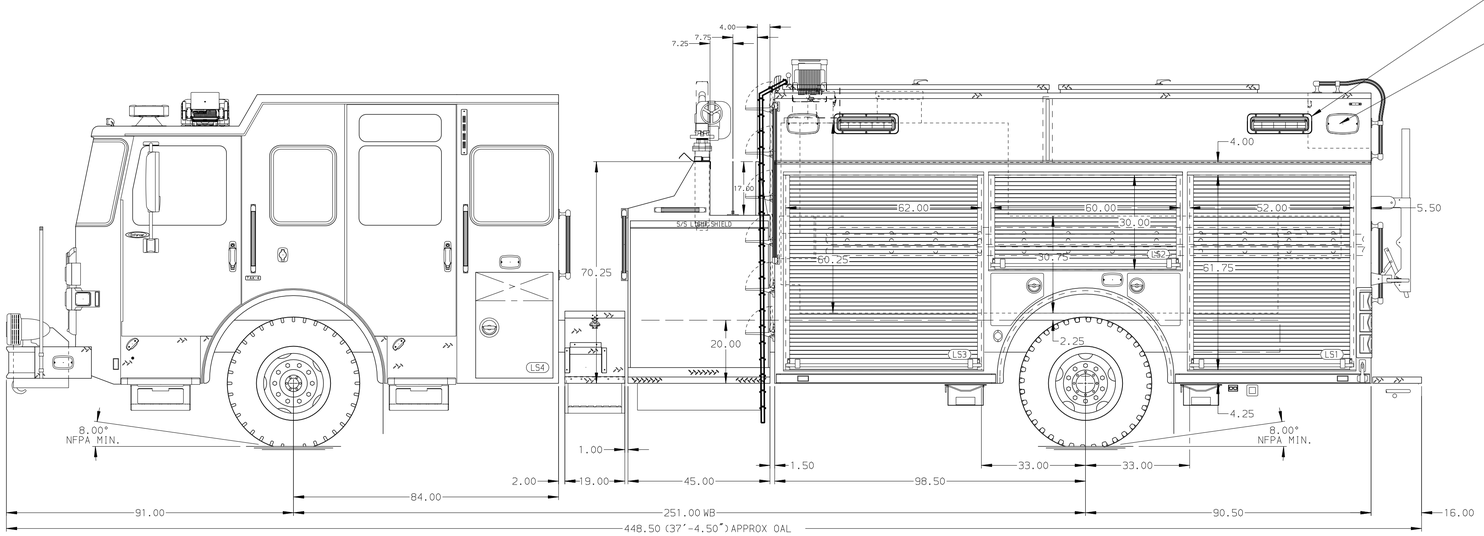

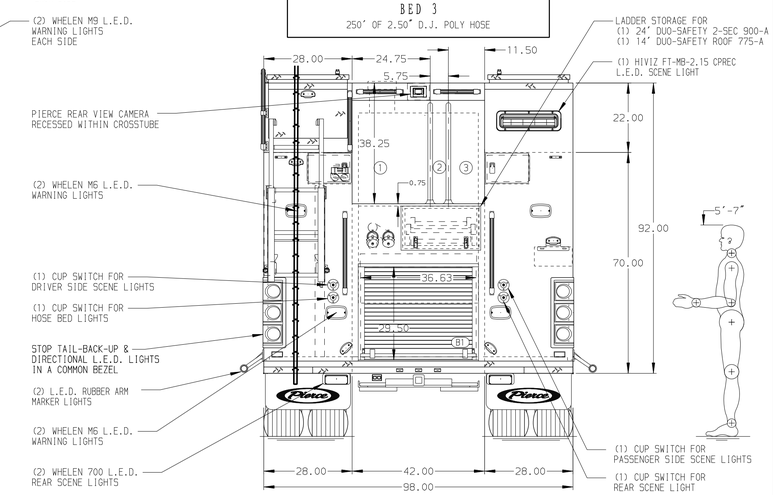

CHASSIS	CAB	AXLE,FRONT,CUSTOM	TRANSMISSION	PUMPHOUSE	CROSSLAYS,1.50"	SPEEDLAYS	SAFETY
Enforcer Chassis	7010 Enforcer Cab	22,800 Lb TAK-4 Axle	ALlison 5th Gen, 3000 EVS P	45" Control Zone Top Mount	(2) 1.50" Standard Capacity	Speedlays Not Required	Frontal Impact Protection
ENGINE	BUMPER	AXLE,REAR		PUMP	CROSSLAYS,2.50"	GENERATOR	
450 HP Cummins L9 Engine	22" Extended Stainless Steel	27,000 Lb Dana Axle		2000 GPM Waterous CSU	2.50" Crosslay Not Required	Generator Not Required	

NOTE

DIMENSIONS SHOWN ARE APPROXIMATE AND ARE SUBJECT TO MINOR DEVIATIONS AS MAY OCCUR OR BE NECESSARY IN CONSTRUCTION.
MINOR DETAILS NOT SHOWN.

1. ONE 1.50 OUTLET WITH 2.00 PIPING AND SWIVEL LOCATED IN LEFT BUMPER TRAY
2. SHORELINE RECEPTACLE WITH KUSSMAUL SUPER AUTO-EJECT LOCATED ON DRIVER SIDE OF THE CAB
3. AIR INLET/OUTLET WITH DISCONNECT FITTING LOCATED PER SHOP ORDER
4. BATTERY CHARGER LOCATED IN COMPARTMENT PER SHOP ORDER
5. BATTERY CHARGE INDICATOR LOCATED ON THE DRIVER SIDE SEAT RISER
6. KUSSMAUL AIR COMPRESSOR LOCATED PER SHOP ORDER

REV	DATE	BY	CH
V	07DEC21	MMF	CSH

CHASSIS DATA
MAKE: PIERCE
MODEL: ENFORCER

Pierce MANUFACTURING INC.

JOB NO.	36744		
SCALE	1:24	DATE	
TITLE	Pierce HDRP Pumper Approval drawing -	DRAWN BY	MMF 08SEP21
FOR	Wyandanch Volunteer Fire Company Inc -	CHECKED BY	COL 08SEP21
DWG NO.	36744AD-SH1	SHEET SIZE	D
		SHEET NO.	1 OF 2

View File Created 08-DEC-2021 07:57:29