PASSENGER'S SIDE COMPARTMENTS CONTAIN THE FOLLOWING:

COMPARTMENT RS1 CONTAINS:
- (2) SHELF,ADJUSTABLE,500LB CAP. STD DEPTH COMPT

COMPARTMENT RS2 CONTAINS:
- (1) SHELF,ADJUSTABLE,500LB CAP. STD DEPTH COMPT

COMPARTMENT RS3 CONTAINS:
- (1) EXTENDED COMPARTMENT FLOOR BOLT IN STYLE
- (1) TRAY,SLIDE OUT,TWO WAY,TRANSVERSE COMPT,ADJUSTABLE HEIGHT,500# CAPACITY

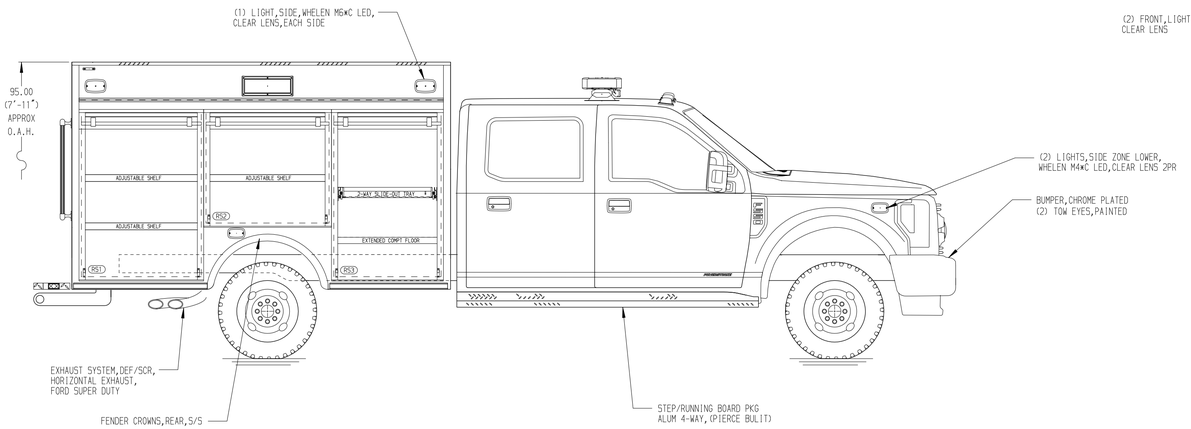

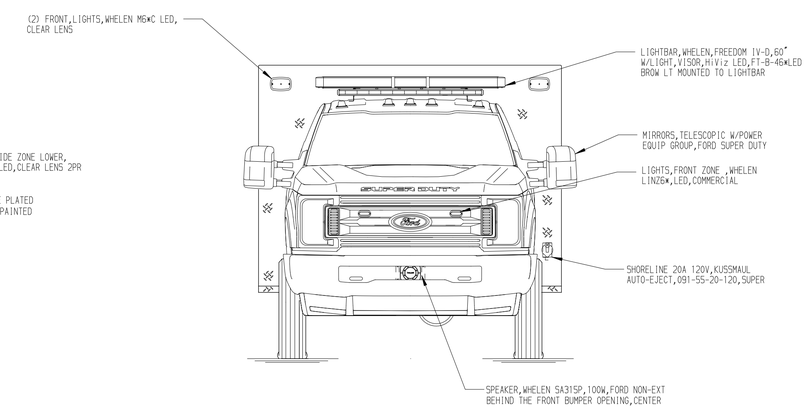

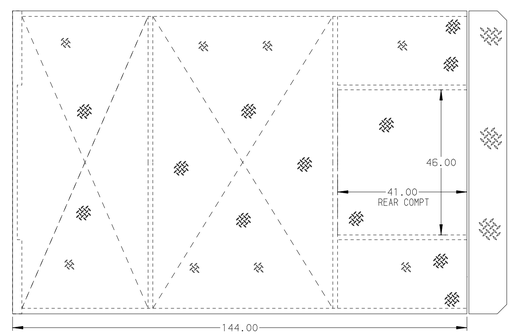

REAR COMPARTMENT B1 CONTAINS THE FOLLOWING:

COMPARTMENT R1 CONTAINS:
- (1)TRAY,SLIDE-OUT,FULL DEPTH,B1 COMPT,FLOOR MONUT,500LB CAPACITY

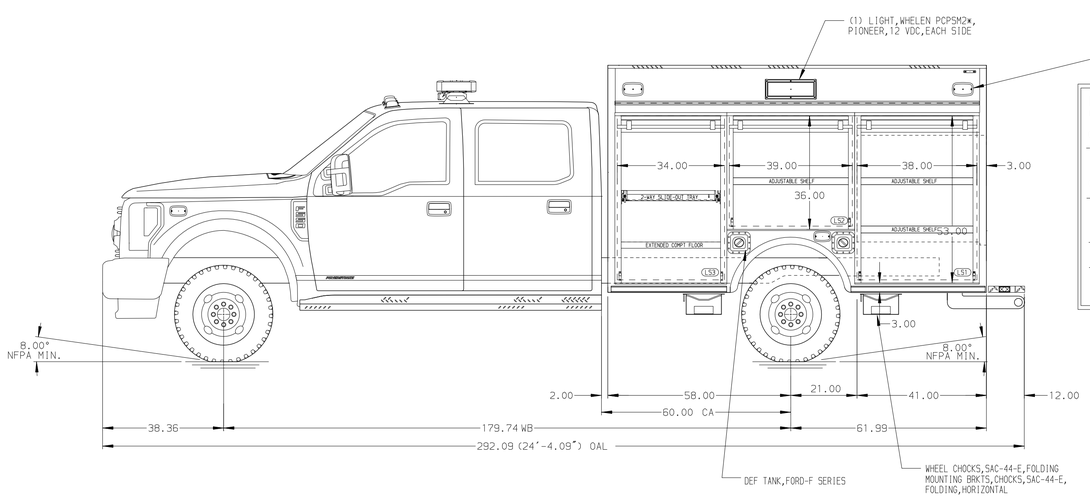

DRIVER'S SIDE COMPARTMENTS CONTAIN THE FOLLOWING:

COMPARTMENT LS1 CONTAINS:
- (2) SHELF,ADJUSTABLE,500LB CAP. STD DEPTH COMPT

COMPARTMENT LS2 CONTAINS:
- (1) SHELF,ADJUSTABLE,500LB CAP. STD DEPTH COMPT

COMPARTMENT LS3 CONTAINS:
- (1) EXTENDED COMPARTMENT FLOOR BOLT IN STYLE
- (1) TRAY,SLIDE OUT,TWO WAY,TRANSVERSE COMPT,ADJUSTABLE HEIGHT,500# CAPACITY

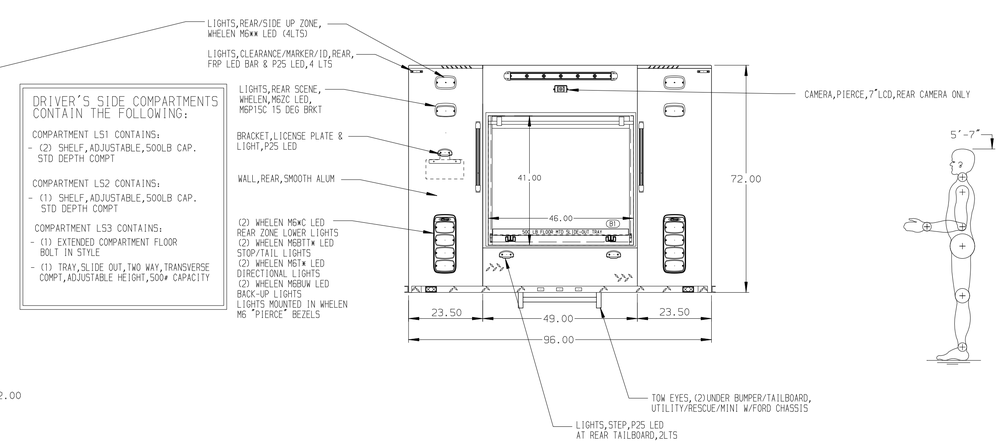

ALUMINUM BODY

NOTE
DIMENSIONS SHOWN ARE APPROXIMATE AND ARE SUBJECT TO MINOR DEVIATIONS AS MAY OCCUR OR BE NECESSARY IN CONSTRUCTION.
MINOR DETAILS NOT SHOWN.

REV.	DATE	BY	CHK'D
7	19NOV21	RWI	JLA

CHASSIS DATA
CHASSIS FORD
MODEL F-550 4X2

Pierce MANUFACTURING INC.
BRADENTON, FLORIDA

JOB NO.	36795		
DATE		SCALE	1:24
TITLE	10' RESCUE,NON-WALK IN –	DRAWN BY	JLA
		03NOV21	
FOR	PIERCE FIELD UNIT BRADENTON, FLORIDA	CHK'D BY	RWI
		03NOV21	
DRWG. NO.	36795AD	SHEET NO.	1 OF 1
		SHEET SIZE	D

View File Created 19-NOV-2021 13:10:11