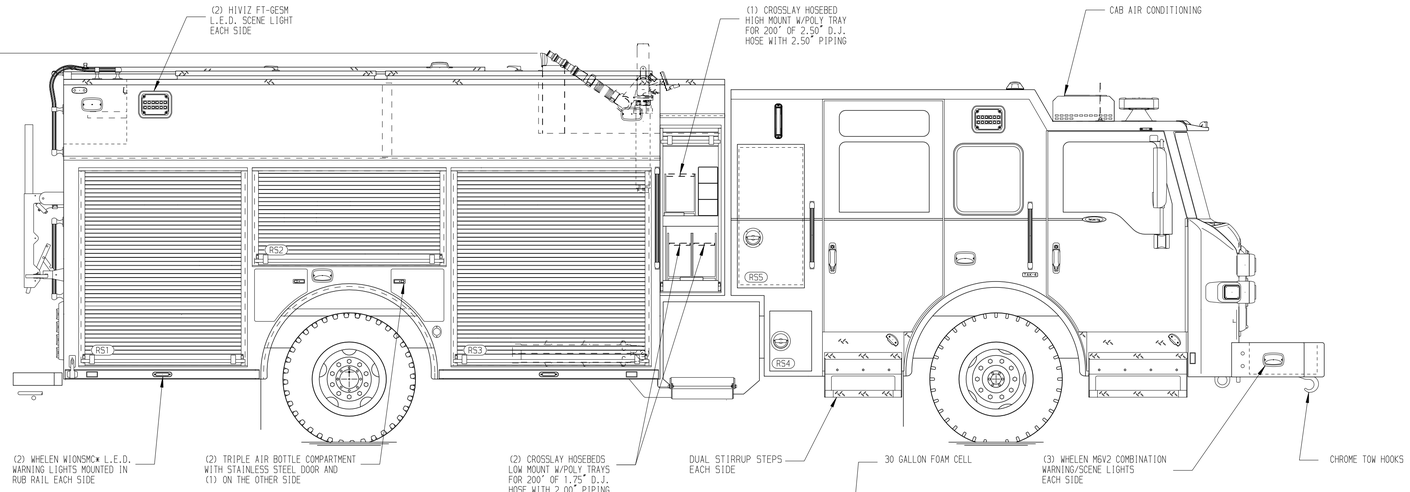

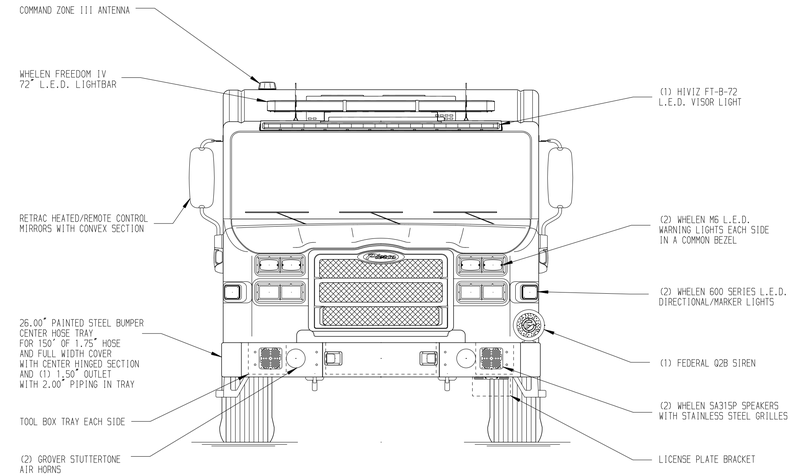

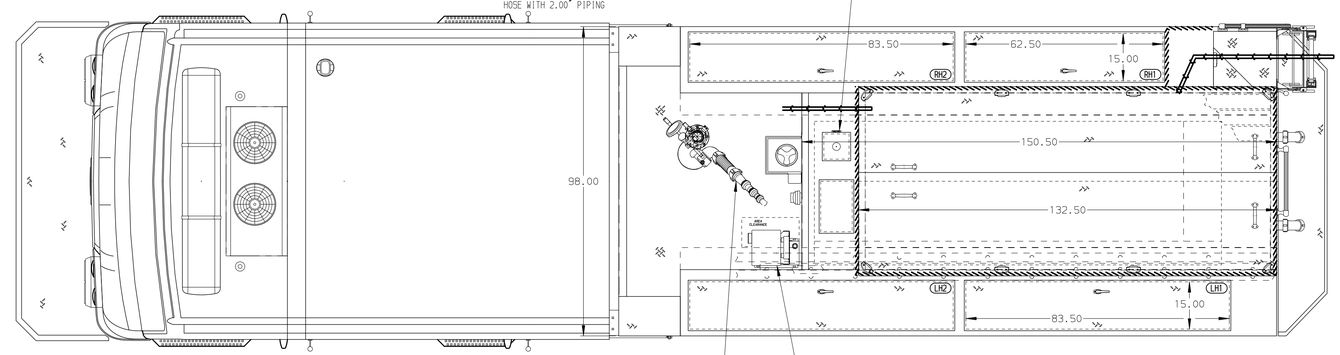

HOSEBED CAPACITIES

1 - 1000' OF 5.00" NORTH AMERICAN POLY TUFF HOSE
2 - 400' OF 3.00" NORTH AMERICAN POLY TUFF HOSE

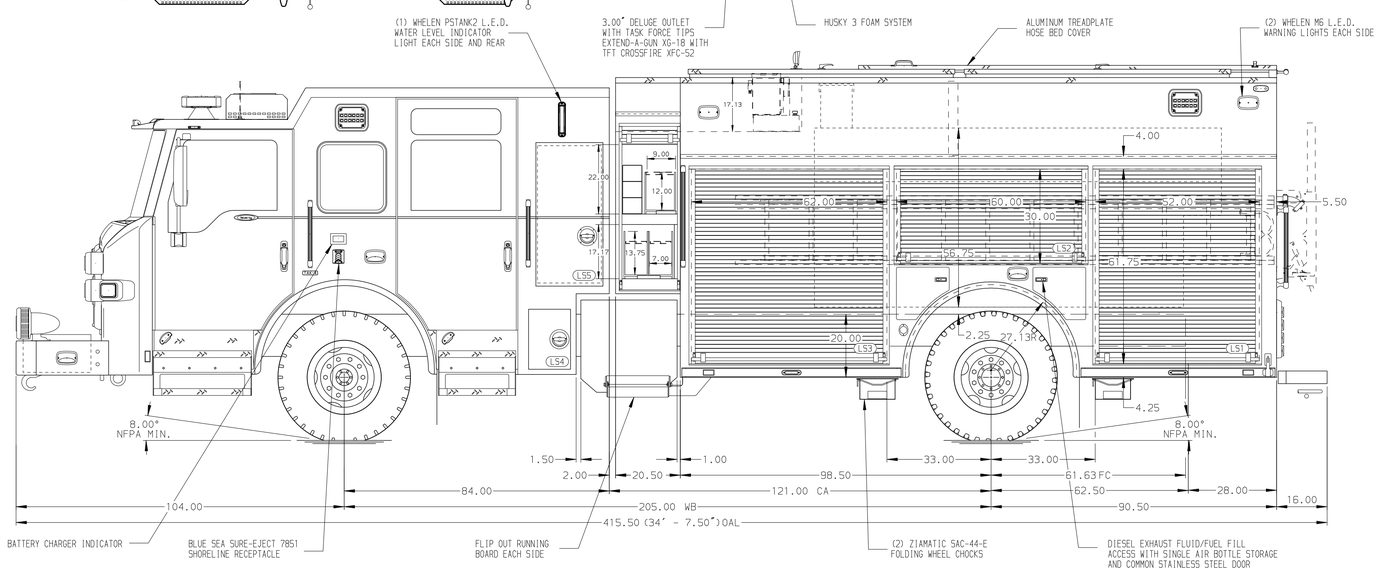

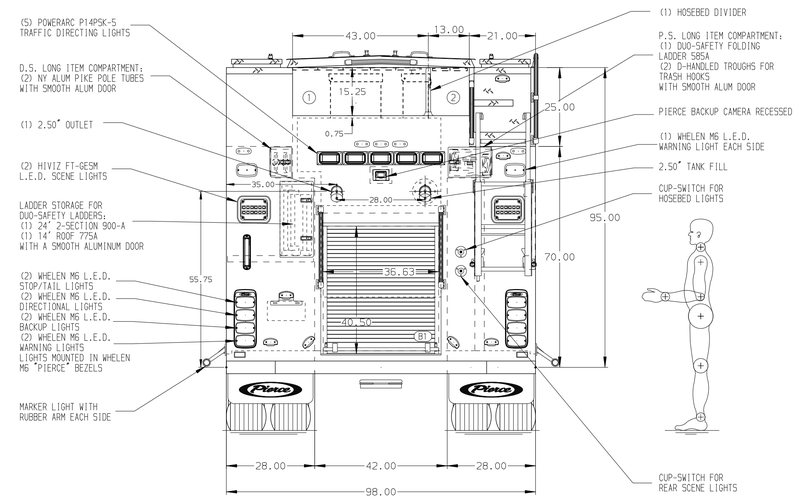

ALUMINUM BODY

SIDE ROLL AND FRONTAL IMPACT PROTECTION

NOTE

DIMENSIONS SHOWN ARE APPROXIMATE AND ARE SUBJECT TO MINOR DEVIATIONS AS MAY OCCUR OR BE NECESSARY IN CONSTRUCTION.
MINOR DETAILS NOT SHOWN.

1. AIR INLET/OUTLET W/DISCONNECT COUPLING LOCATED ON DRIVER'S SIDE PUMP PANEL
2. BATTERY CHARGER LOCATED BEHIND DRIVER'S SEAT
3. FOUR FULL WIDTH/DEPTH ADJUSTABLE SHELVES LOCATED PER SHOP ORDER
4. ONE ADJUSTABLE SLIDE-OUT TRAY LOCATED PER SHOP ORDER
5. TWO ADJUSTABLE TILTING SLIDE-OUT TRAYS LOCATED PER SHOP ORDER
6. TWO FLOOR MOUNTED SLIDE-OUT TRAYS LOCATED PER SHOP ORDER
7. ONE SWING-OUT ALUMINUM TOOL BOARD LOCATED PER SHOP ORDER
8. ONE FLOOR MOUNTED SLIDE-OUT TRAY WITH FLAT TOP LOCATED PER SHOP ORDER
9. TWO SLIDE-OUT TOOL BOARDS WITH PEGBOARD PATTERN LOCATED PER SHOP ORDER
10. LITTLE GIANT LADDER STORAGE LOCATED PER SHOP ORDER
11. RETENTION NETTING LOCATED PER SHOP ORDER
12. ONE VERTICAL PARTITION LOCATED PER SHOP ORDER
13. THREE ADJUSTABLE VERTICAL HOSE STORAGE SLOTS LOCATED PER SHOP ORDER
14. PEGBOARD ON BACK WALL W/TRACK LOCATED PER SHOP ORDER
15. ZICO TOOL MOUNT TURNTABLE LOCATED IN COMPARTMENT RS1

REV	DATE	BY	CH
1	03DEC21	JJB	WKL

CHASSIS DATA
MAKE: PIERCE
MODEL: VELOCITY FR

CUSTOMER APPROVAL

APPROVED BY: _____

DATE: _____

Pierce MANUFACTURING INC.

TITLE: 1500-D-1030P, 1000G WATER W/ 30G FOAM, 189" RESCUE LS LADDER BODY STORAGE, (3) CROSSLAYS, DELUGE

FOR: WILSON COUNTY ESD #1
LA VERNIA, TEXAS

DWG NO.: 36810AD

JOB NO.	36810
SCALE	1:24
DATE	
DRAWN BY	JJB 24NOV21
CHECKED BY	WKL 24NOV21
SHEET SIZE	D
SHEET NO.	1 OF 1

View File Created 03-DEC-2021 10:52:37