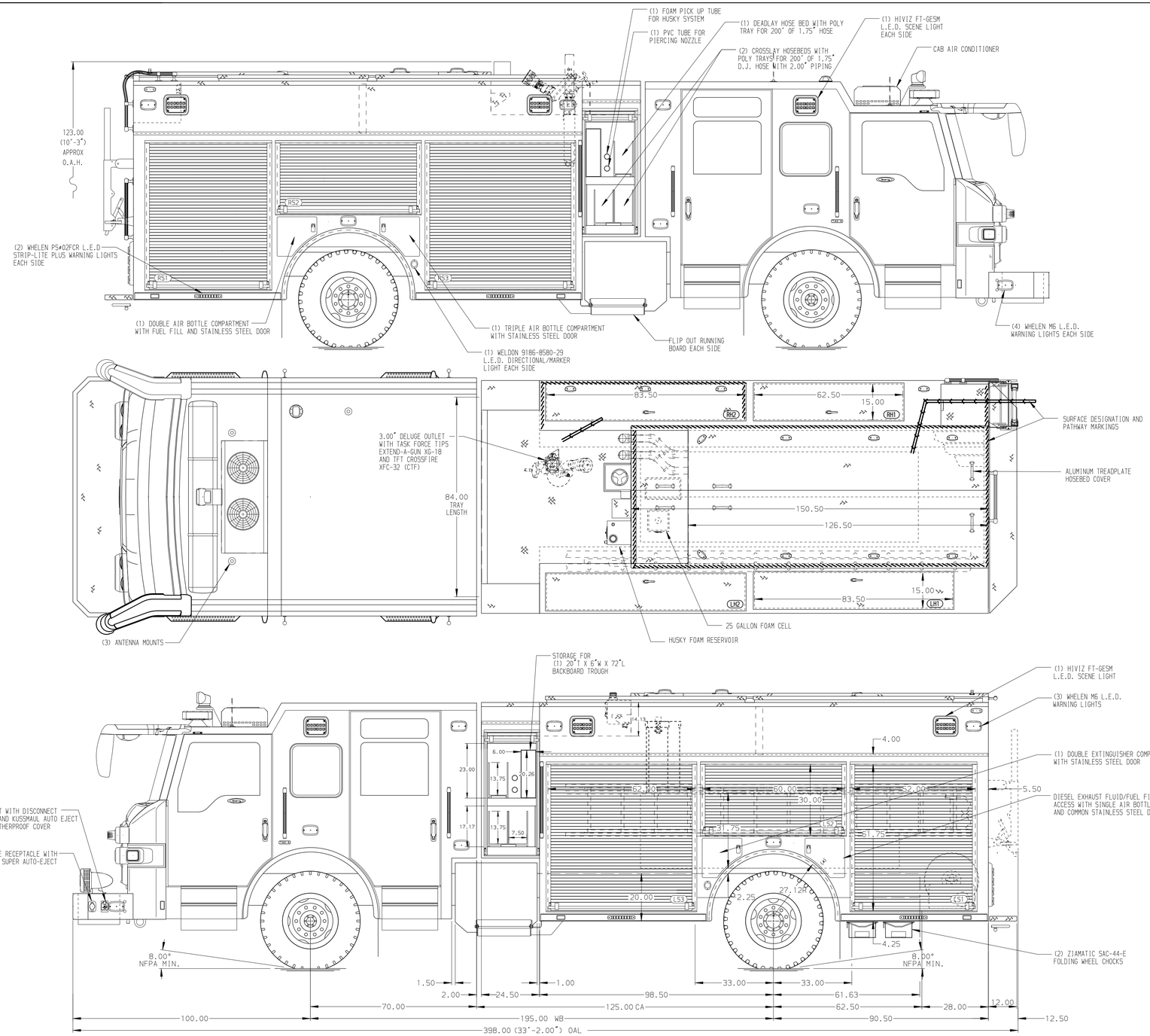

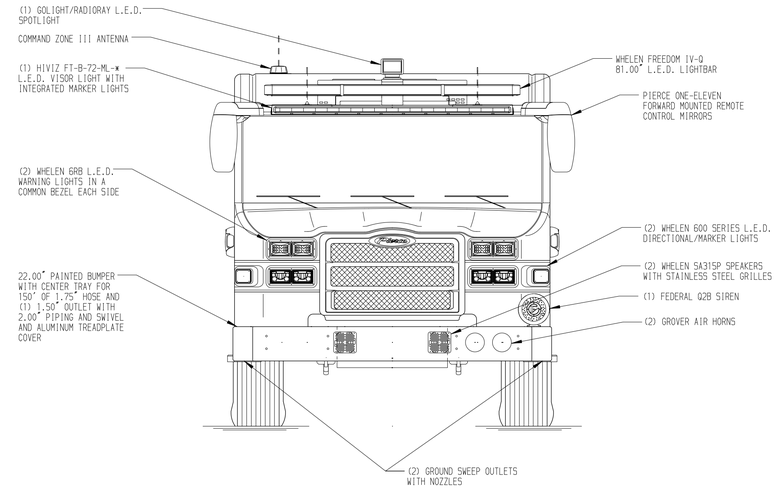

HOSEBED CAPACITIES

1 - 200' OF 2.50" D.J. HOSE
2 - 1000' OF 5.00" L.D. HOSE
3 - 200' OF 2.50" D.J. HOSE
4 - 200' OF 2.50" D.J. HOSE
5 - 200' OF 2.50" D.J. HOSE

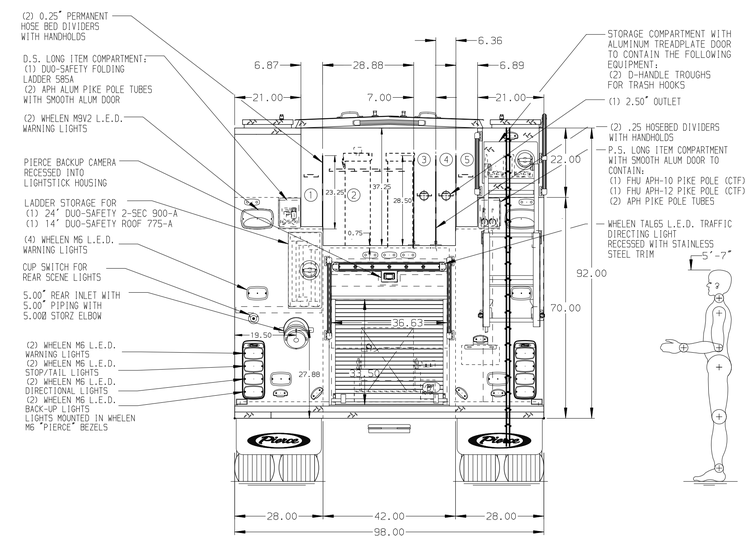

ALUMINUM BODY

SIDE ROLL AND FRONTAL IMPACT PROTECTION

NOTE

DIMENSIONS SHOWN ARE APPROXIMATE AND ARE SUBJECT TO MINOR DEVIATIONS AS MAY OCCUR OR BE NECESSARY IN CONSTRUCTION.
MINOR DETAILS NOT SHOWN.

1. BATTERY CHARGER LOCATED IN COMPARTMENT LS3
2. BATTERY CHARGE INDICATOR LOCATED NEAR DRIVER'S SEAT RISER WITH BRACKET
3. ONE FULL WIDTH/DEPTH ADJUSTABLE SHELF IN COMPARTMENTS LS2,RS1
4. ONE ADJUSTABLE SLIDE-OUT TRAY IN COMPARTMENTS LS3,RS3
5. ONE ADJUSTABLE TILTING SLIDE-OUT TRAY IN COMPARTMENT RS1 TWO IN RS3
6. ONE FLOOR MOUNTED SLIDE-OUT TRAY WITH SIDE SLIDES IN COMPARTMENTS LS1,RS3
7. ONE SWING-OUT ALUMINUM TOOL BOARD IN COMPARTMENT LS1
8. ZIAMATIC SCBA HOLDER BRACKET LOCATED RS2,RS3
9. REMOVEABLE FILTER FOR ALL BODY COMPARTMENTS WITH LOUVERS
10. PAC TRAC ON BACK WALL OF COMPARTMENTS LS1,LS3
11. PULL STRAP FOR CROSSLAY ROLLLUP DOORS
12. ONE DOUBLE TILTING SLIDE-OUT TRAY IN COMPARTMENT RS2
13. ONE PARTITION BETWEEN LS1/B1 AND RS1/B1
14. ONE VERTICAL PARTITION IN COMPARTMENT RS3
15. CABLE RELEASE ON ALL TILTING SLIDE-OUT TRAYS
16. SLIDE-OUT ROLLER GUIDE BRACKET WITH ALUMINUM ROLLER GUIDE IN COMPARTMENT B1
17. DUST FILTER FOR LOUVER IN COMPARTMENT B1
18. REINFORCEMENT FOR WALL IN COMPARTMENT LS1
19. ALUMINUM BOOSTER REEL (EF24-23-24-12) FOR 100' OF 1.00 NIEDNER REELTEX HOSE IN COMPARTMENT B1
20. REFRIGERATOR IN RS1 TO BE INSTALLED PER SHOP ORDER
21. 12V FAN IN PARTITION BETWEEN RS1/B1

REV	DATE	BY	CH
1	17DEC21	LME	AST
2	12NOV21	JJB	AST
3	01SEP21	LME	CZA

CHASSIS DATA	
MAKE	PIERCE
MODEL	VELOCITY FR
DWG NO.	36816AD

Pierce MANUFACTURING INC.

TITLE	1500-D-500P, 475 WATER W/25 FOAM, 189" PUC RESCUE (2) CROSSLAYS, (1) DEADLAY, HUSKY 12, BOOSTER REEL
FOR	QUEEN CREEK FIRE DEPARTMENT QUEEN CREEK, ARIZONA
JOB NO.	36816
SCALE	1:24
DRAWN BY	LME
DATE	26AUG21
CHECKED BY	CZA
DATE	27AUG21
SHEET SIZE	D
SHEET NO.	1 OF 1

View File Created 17-DEC-2021 14:41:36