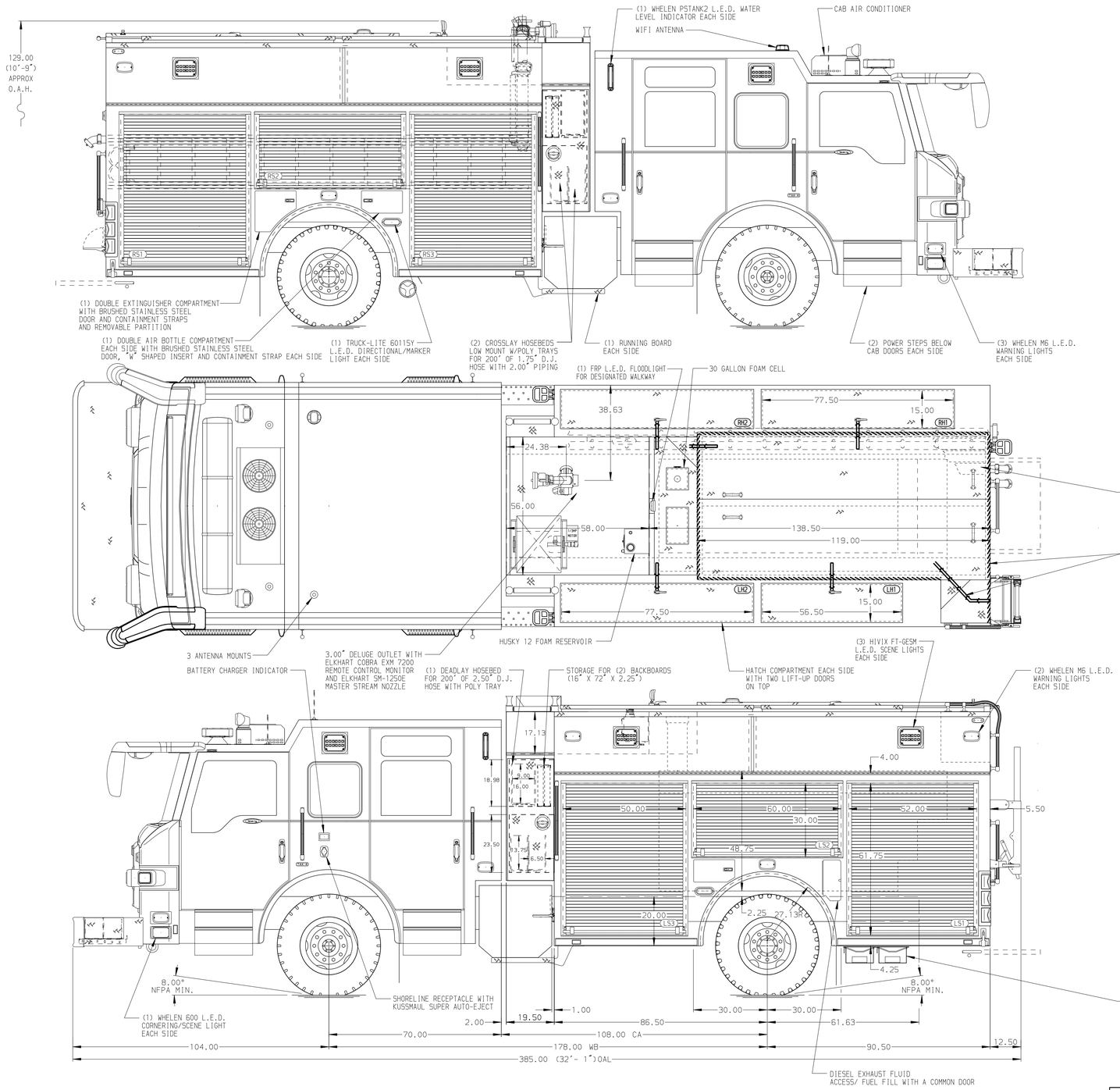

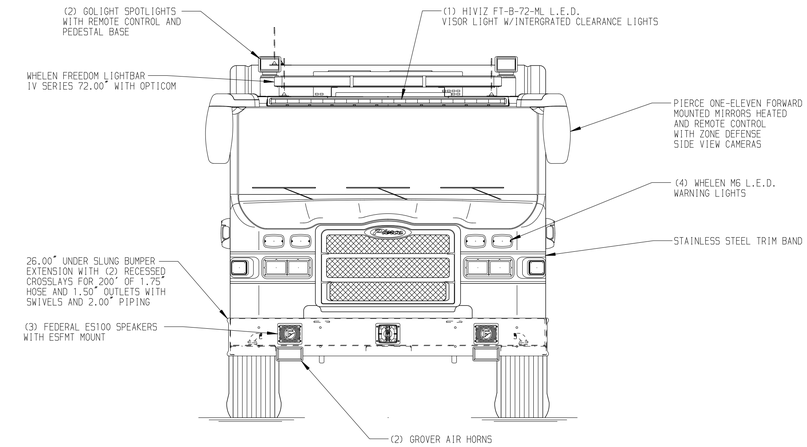

HOSEBED CAPACITIES

1. 1000' OF 5.00" D.J. POLYESTER HOSE
2. 200' OF 3.00" D.J. POLYESTER HOSE
3. 200' OF 3.00" D.J. POLYESTER HOSE
4. 400' OF 3.00" D.J. POLYESTER HOSE

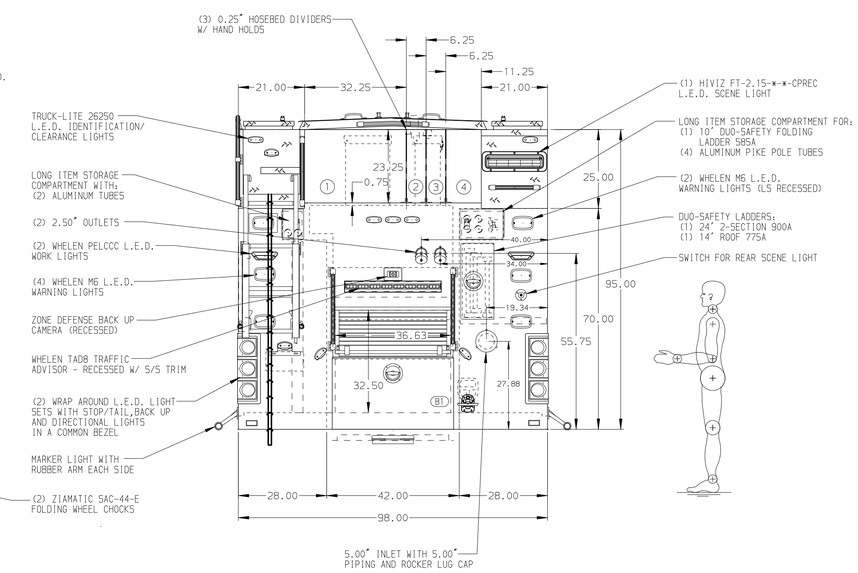

ALUMINUM BODY

SIDE ROLL & FRONTAL IMPACT PROTECTION

NOTE

DIMENSIONS SHOWN ARE APPROXIMATE AND ARE SUBJECT TO MINOR DEVIATIONS AS MAY OCCUR OR BE NECESSARY IN CONSTRUCTION.
MINOR DETAILS NOT SHOWN.

1. PUMP PANEL DRAWING REQUIRED
2. AIR INLET LOCATED ON LS PUMP PANEL
3. AIR OUTLET ON LS PUMP PANEL
4. BATTERY CHARGER LOCATED BEHIND DRIVER'S SEAT
5. ONE HANNAY ELECTRIC REWIND BOOSTER HOSE REEL MODEL EF26-23-24-10.5 WITH 150' OF 0.75" NIEDNER HOSE LOCATED IN CARGO AREA
6. ELECTRIC LOCKS ON ROLL UP DOOR OF COMPARTMENT RS3

REV	DATE	BY	CH
▽	-	-	-

CUSTOMER APPROVAL

APPROVED BY: _____

DATE: _____

Pierce MANUFACTURING INC.

CHASSIS DATA	
MAKE	PIERCE
MODEL	VELOCITY FR
TITLE	1500-D-710 WATER/30 FOAM, 177" BODY, HATCH COMPARTS. CROSSLAYS, DEADLAY, LADDERS THRU BODY, FOAM SYSTEM
FOR	CITY OF SCOTTSDALE SCOTTSDALE, ARIZONA
DWG NO.	36874AD-SH1
JOB NO.	36874 01-03
SCALE	1:24
DATE	
DRAWN BY	LST 03JAN22
CHECKED BY	JJR 4JAN22
SHEET SIZE	D
SHEET NO.	1 OF 2

View File Created 04-JAN-2022 11:51:12