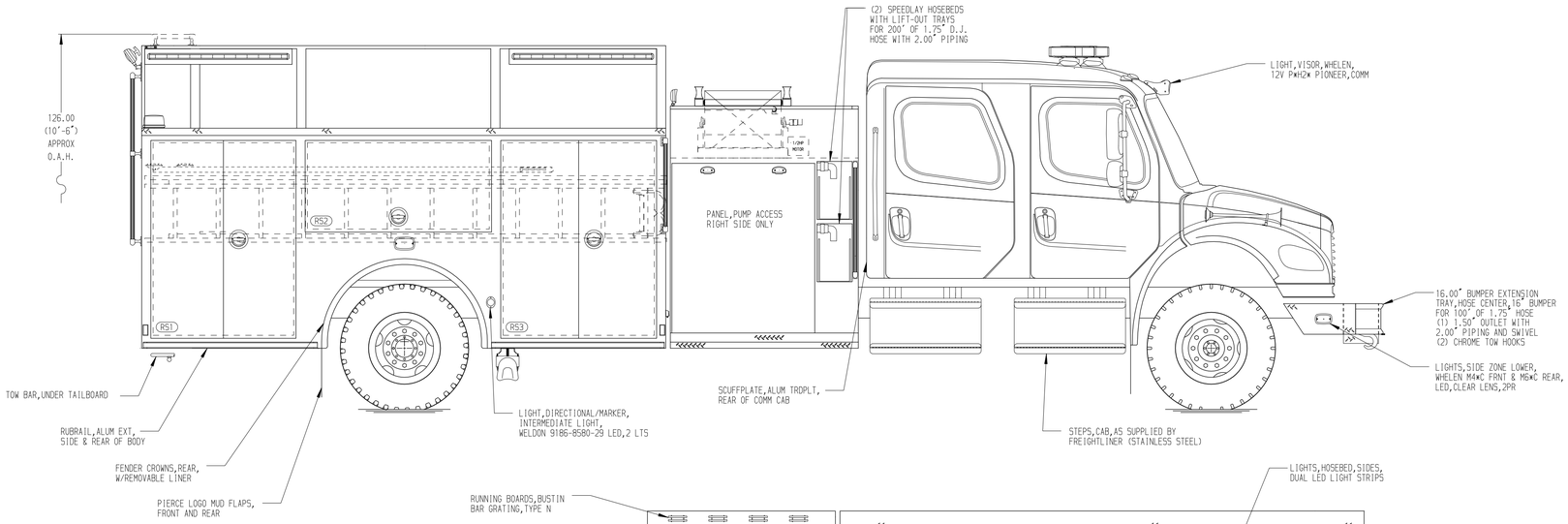

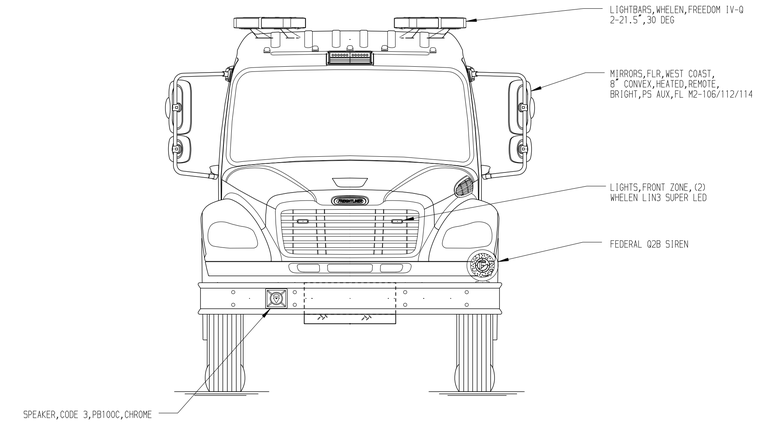

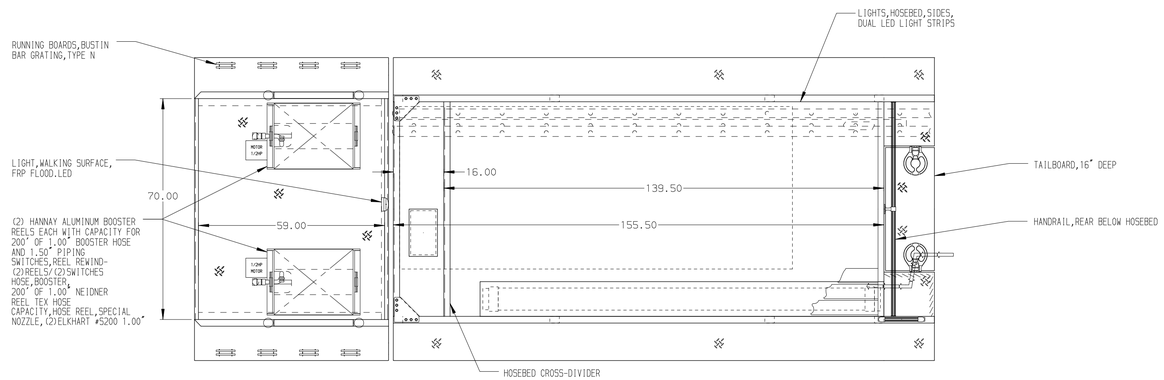

HOSEBED CAPACITIES
1 1000' OF 5.00" D.J. POLY HOSE
2 1000' OF 3.00"' D.J. POLY HOSE

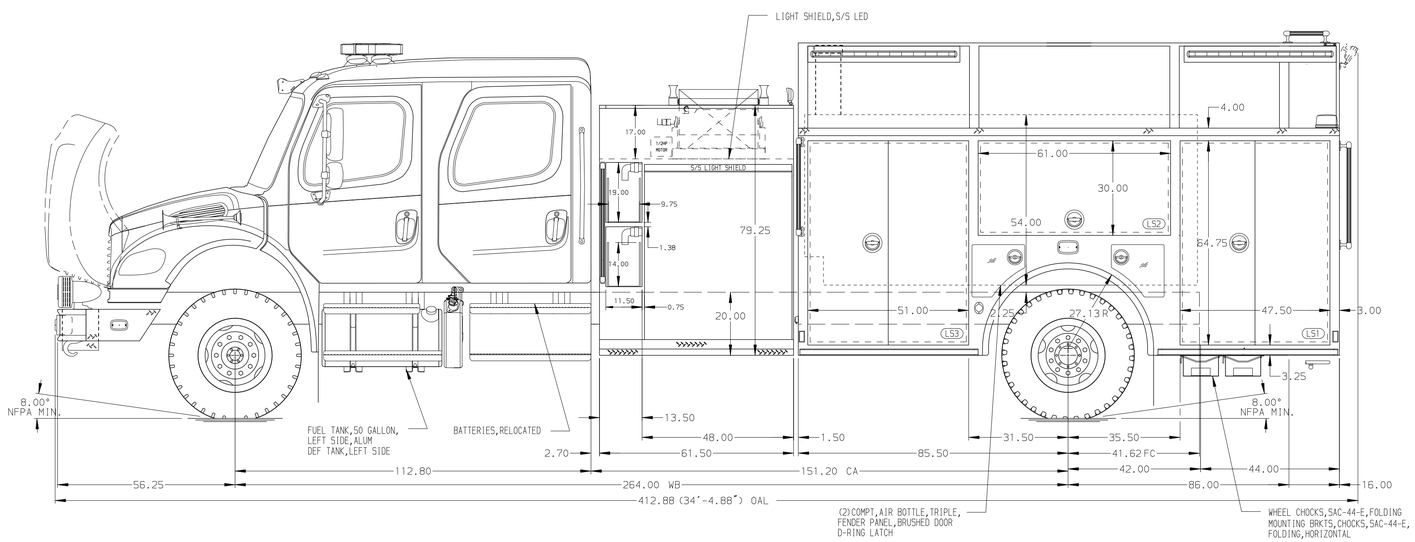

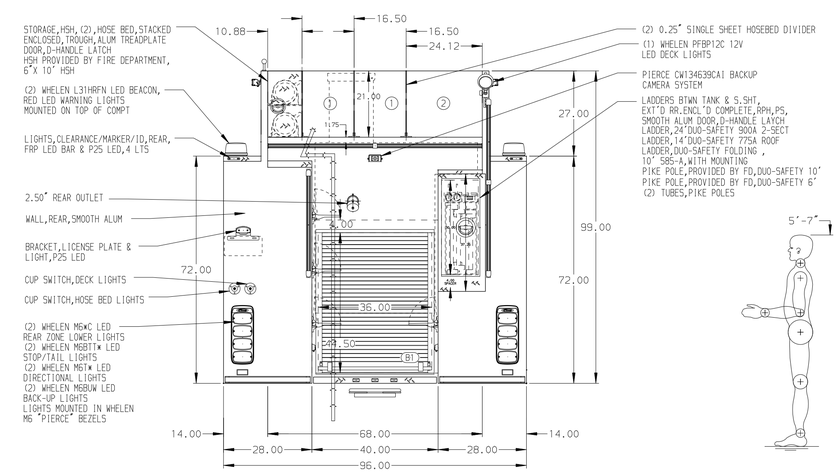

ALUMINUM BODY

NOTE
DIMENSIONS SHOWN ARE APPROXIMATE AND ARE SUBJECT TO MINOR DEVIATIONS AS MAY OCCUR OR BE NECESSARY IN CONSTRUCTION.
MINOR DETAILS NOT SHOWN.

REV	DATE	BY	CH
7	30NOV21	JLA	RWI

CHASSIS DATA — MAKE: PIERCE — MODEL: M2-106

Pierce MANUFACTURING INC.

TITLE: 1250-D-1000P,171",LS FL HGT&DPTH,RS FL HGT FRT&RR FDLER,48"SIDE CONTROL,(2)1.5"W/POLY TRAYS SPEEDLAYS

FOR: LIVERPOOL TWP FIRE DEPARTMENT, EAST LIVERPOOL, OHIO

DWG NO.: 36910AD

JOB NO.	SCALE	DRAWN BY	CHECKED BY	SHEET SIZE	SHEET NO.
36910	1:24	JLA	RWI	D	1 OF 1

DATE: 09NOV21 — 10NOV21

View File Created 30-NOV-2021 14:05:40