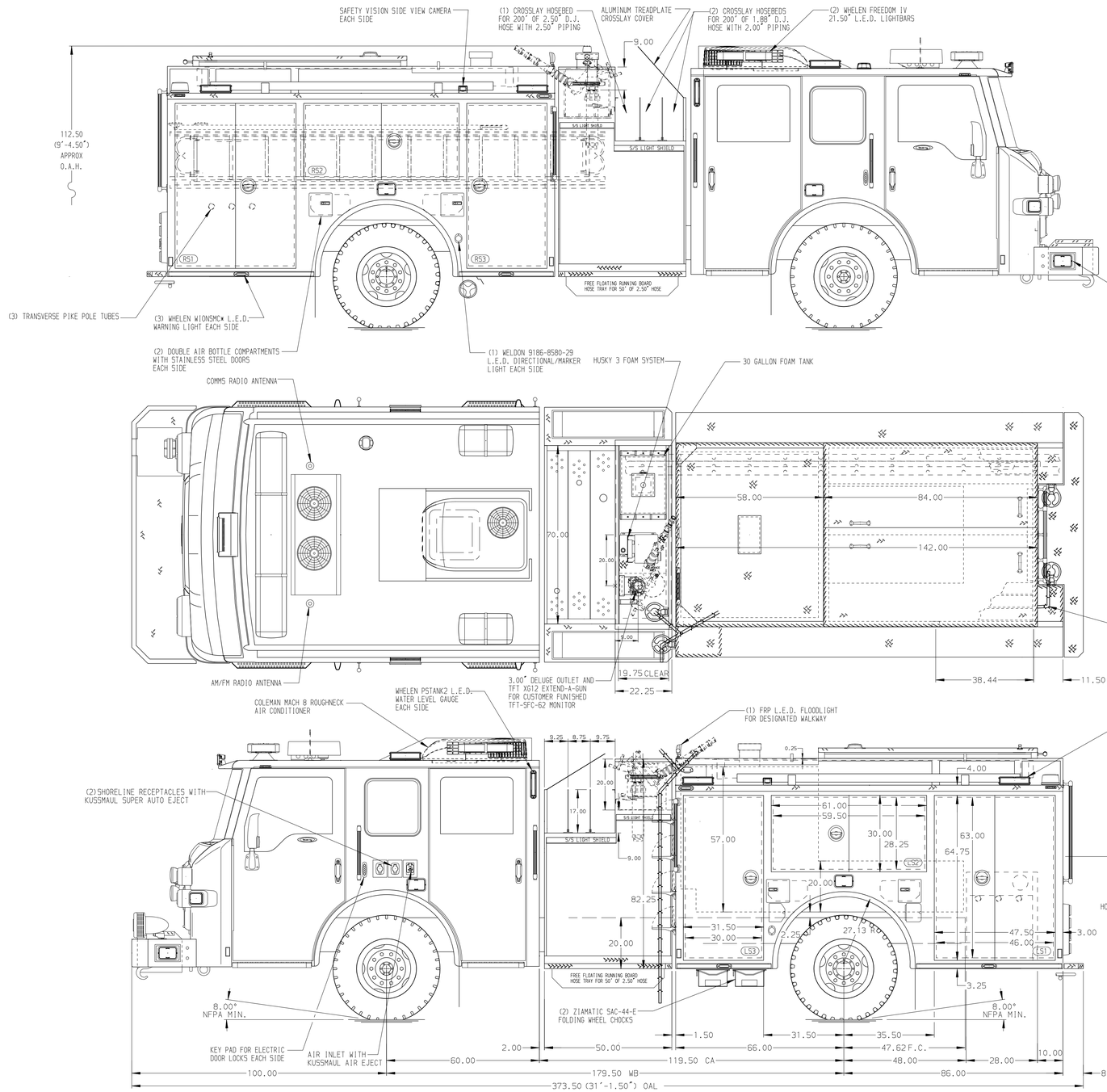

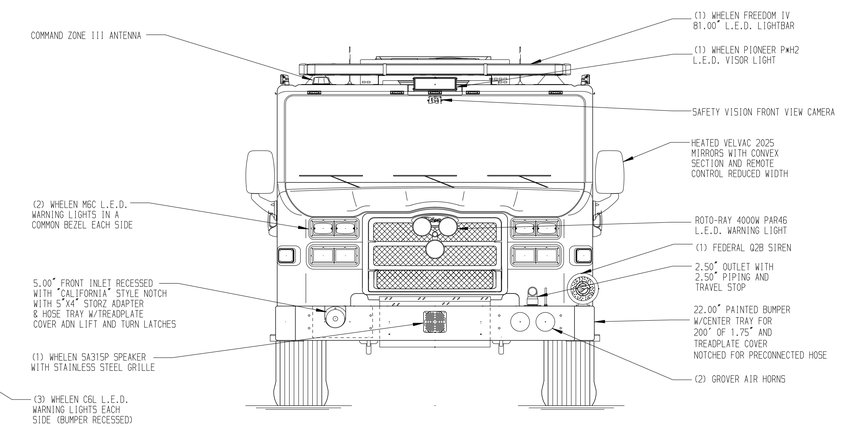

HOSE BED CAPACITIES

1. 200' OF 2.50" D.J. HOSE
2. 200' OF 2.50" D.J. HOSE
3. 1500' OF 4.00" D.J. HOSE
4. 350' OF 2.50" D.J. HOSE

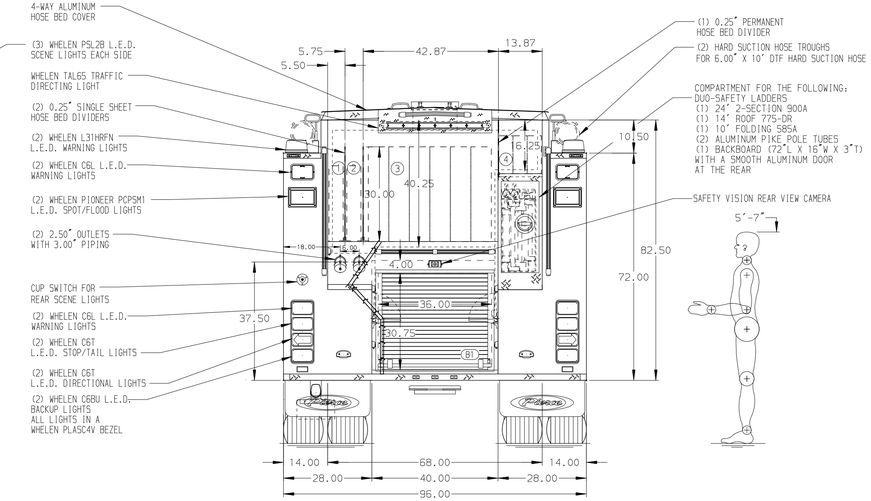

ALUMINUM BODY | MAXIMUM O.A.H. 112" | MAXIMUM O.A.L. 374"

NOTE

DIMENSIONS SHOWN ARE APPROXIMATE AND ARE SUBJECT TO MINOR DEVIATIONS AS MAY OCCUR OR BE NECESSARY IN CONSTRUCTION.
MINOR DETAILS NOT SHOWN.

1. BATTERY CHARGER AND COMPRESSOR LOCATED BEHIND DRIVER'S SEAT
2. BATTERY CHARGE INDICATOR LOCATED NEAR DRIVER'S SEAT RISER WITH BRACKET
3. ONE DRIP PAN GUARD FOR ROLL-UP DOOR LOCATED IN COMPARTMENT PER OPTION LIST
4. FIVE FULL WIDTH ADJUSTABLE SHELVES LOCATED IN COMPARTMENTS PER OPTION LIST
5. TWO FLOOR MOUNTED SLIDE-OUT TRAY IN COMPARTMENTS PER OPTION LIST
6. AIR OUTLET W/SHUT OFF VALVE LOCATED ON LS PUMP PANEL

REV	DATE	BY	CH
V	14JAN22	JRC	JRC

CHASSIS DATA: MAKE PIERCE; MODEL VELOCITY

Pierce MANUFACTURING INC.

TITLE: 1750-D-720P,720G WATER,30G FOAM TANK,152" FDLER BODY (3) CROSSLAYS, RS BODY LADDER STORAGE, DELUGE

FOR: ST. ANDREWS FIRE DEPARTMENT, ST. ANDREWS, SOUTH CAROLINA

DWG NO.: 36923AD

JOB NO.	SCALE	DRAWN BY	DATE	CHECKED BY	SHEET SIZE	SHEET NO.
36923	1:24	JRC	03JAN22	EGO	D	1 OF 1

View File Created 17-JAN-2022 07:13:23