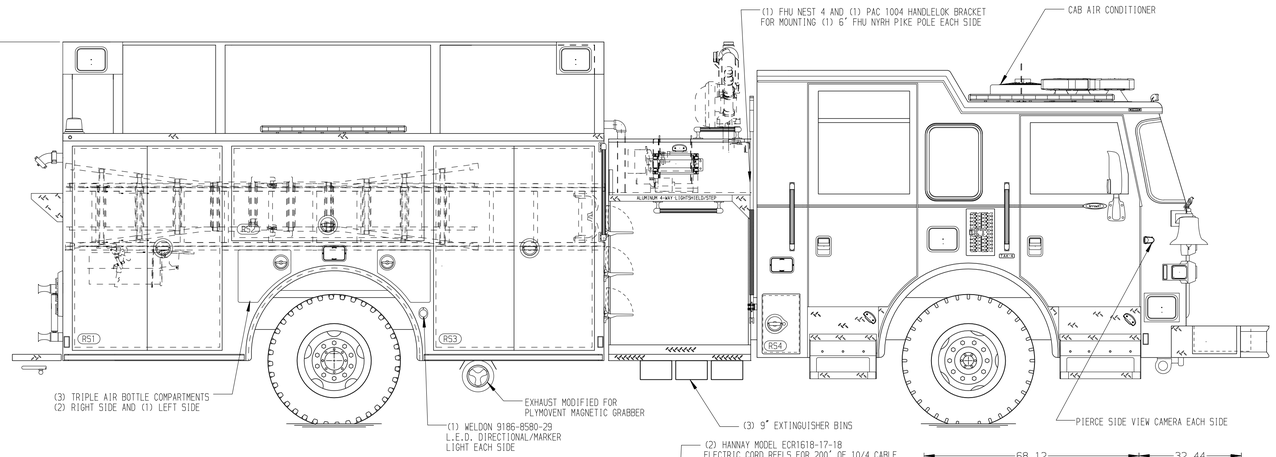

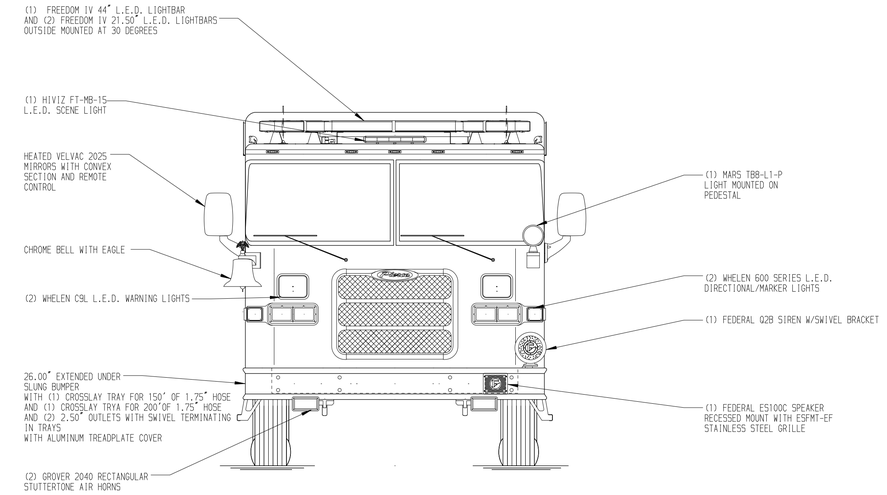

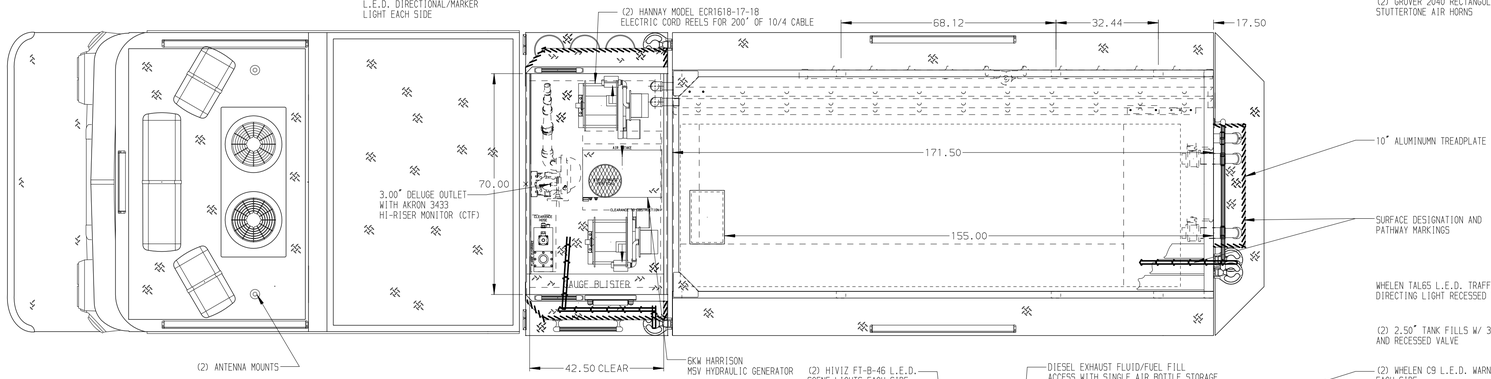

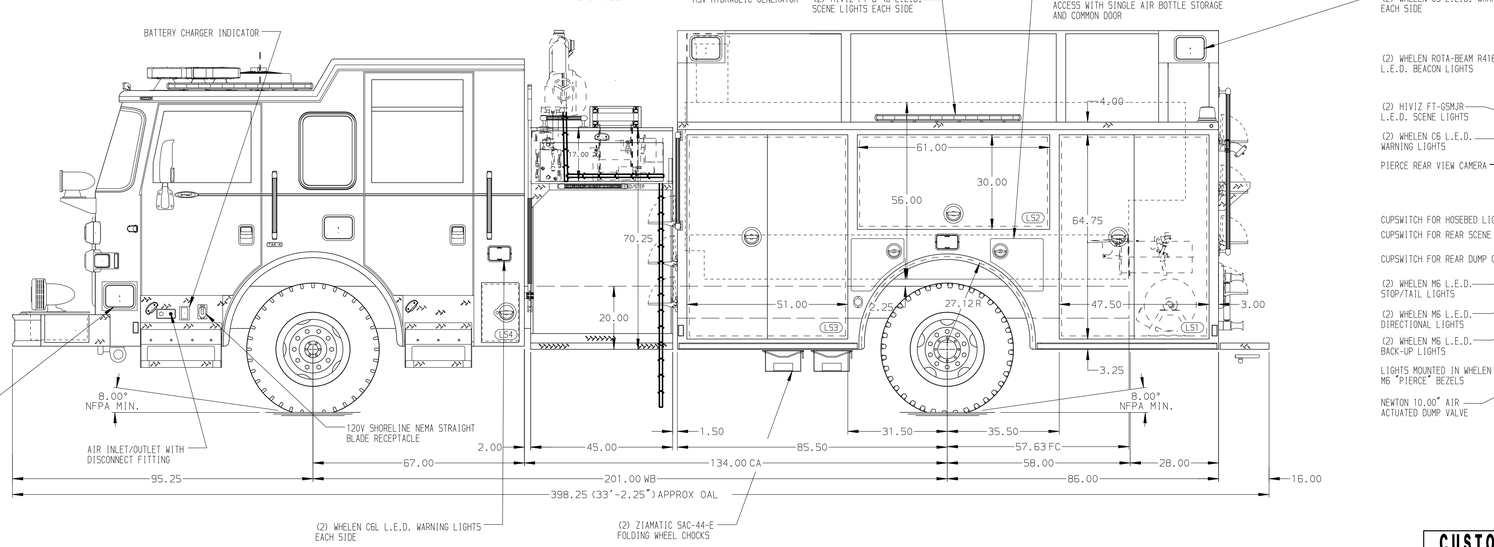

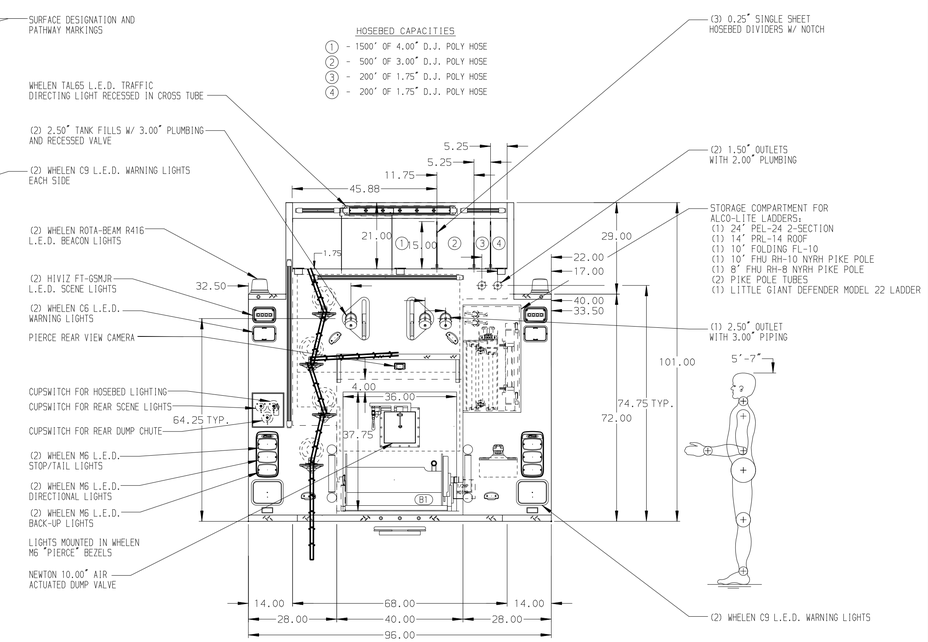

ALUMINUM BODY

SIDE ROLL AND FRONTAL IMPACT PROTECTION

NOTE

DIMENSIONS SHOWN ARE APPROXIMATE AND ARE SUBJECT TO MINOR DEVIATIONS AS MAY OCCUR OR BE NECESSARY IN CONSTRUCTION.
MINOR DETAILS NOT SHOWN.

1. ONSPOT AUTOMATIC TIRE CHAINS TO BE PROVIDED AT REAR
2. ALUMINUM 4-WAY ON CAB ROOF
3. BATTERY CHARGER IN LS3
4. DUAL L.E.D. LIGHT STRIPS LOCATED IN HOSE BED
5. SEVEN FULL WIDTH/DEPTH ADJUSTABLE SHELVES LOCATED ?
6. TWO ADJUSTABLE SLIDE-OUT TRAYS LOCATED ?
7. TWO ADJUSTABLE TILTING SLIDE-OUT TRAYS LOCATED ?
8. TWO FLOOR MOUNTED SLIDE-OUT TRAYS LOCATED PER SHOP ORDER
9. TWO SWING-OUT TOOL BOARDS WITH PEGBOARD PATTERN LOCATED PER SHOP ORDER
10. ONE SLIDE-OUT ALUMINUM TOOLBOARD WITH PEGBOARD LOCATED ?
11. PARTITION BETWEEN LS1/B1 AND RS1/B1
12. TWO VERTICAL PARTITIONS LOCATED ?
13. HANNAY MODEL EF4038-17-18 STEEL BOOSTER REEL IN B1 WITH 200' OF 0.75" BOOSTER HOSE
14. CIRCUIT BREAKER LOCATED PER SHOP ORDER
15. ONE 120V NEMA DUPLEX RECEPTACLE LOCATED BEHIND THE OFFICER'S SEAT AND IN THE EMS CABINET

REV	DATE	BY	CH
▽	-	-	-

CUSTOMER APPROVAL
APPROVED BY:
DATE:

Pierce MANUFACTURING INC.

CHASSIS DATA	
MAKE	PIERCE
MODEL	ARROW XT
DWG NO.	36958AD
TITLE	1500-D-1500G WATER, 171" PUMPER BODY, SIDE CONTROL LADDERS THRU BODY, DELUGE, HOSEREEL, (2) CABLE REELS
FOR	CLEMMONS FIRE DEPARTMENT CLEMMONS, NORTH CAROLINA
JOB NO.	36958
SCALE	1:24
DATE	
DRAWN BY	LST 18JAN22
CHECKED BY	CDU 19DEC22
SHEET SIZE	D
SHEET NO.	1 OF 1

View File Created 19-JAN-2022 14:44:23