RIGHT SIDE COMPARTMENTS
CONTAIN THE FOLLOWING:

COMPARTMENT RS1 CONTAINS:
- (1) SLIDE OUT OIL DRY HOPPER
- (1) RACK FOR 8 SCBA BOTTLES
- (1) CASCADE SYSTEM CONTROL PANEL
- (1) "SPACESAVER"2-BOTTLE FILL ENCLOSURE
-
-

COMPARTMENT RS2 CONTAINS:
- (1) 3/4 DEPTH ADJ SLIDE OUT TRAY
- (1) 1/2 DEPTH ADJ SLIDE OUT/TILT TRAY
- (1) 2-WAY FLOOR MOUNTED SLIDE OUT TRAY
-

COMPARTMENT RS3 CONTAINS:
- (1) HORIZONTAL FLOOR EXTENSION
- (1) VERTICAL COMPARTMENT DIVIDER
- (1) 1/2 DEPTH ADJ SLIDE OUT/TILT TRAY
- (1) 2-WAY FLOOR MOUNTED SLIDE OUT TRAY
- (2) 2-WAY FLOOR MOUNTED SLIDE OUT TRAYS WITH TOOLBOARDS
- (1) LIP ON COMPARTMENT FLOOR
- (4) POLY TOOL BOXES

COMPARTMENT RS4 CONTAINS:
- (1) CAB LIFT CONTROLLER
- (1) HORIZONTAL FLOOR EXTENSION
- (2) VERTICAL COMPARTMENT DIVIDERS
- (1) TRANSVERSE RACK WITH 2 SLOTS
- (1) 10 SLOT PICKETT RACK
- (1) STOKES BASKET RACK
- (1) 2-WAY ADJ SLIDE OUT TRAY
- (1) FLOOR MOUNTED TRAY
- (1) 2-WAY FLOOR MOUNTED SLIDE OUT TRAY
- (1) 2-WAY FLOOR MOUNTED SLIDE OUT TRAY WITH TOOLBOARD
-

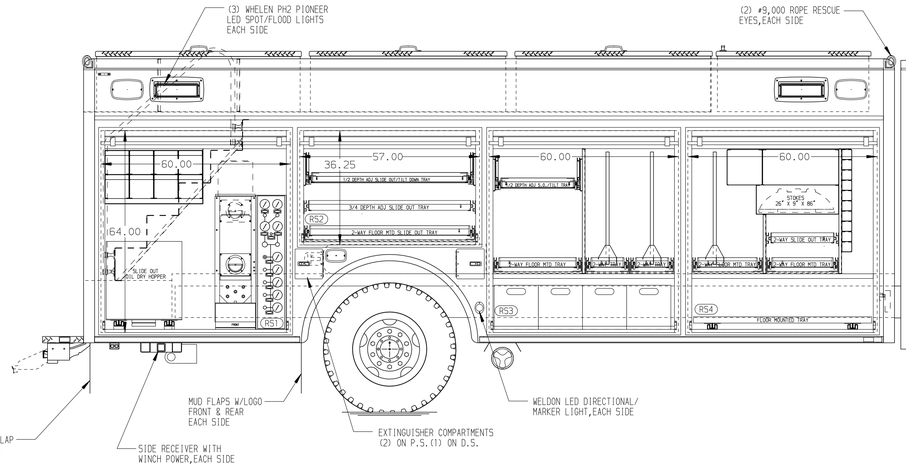

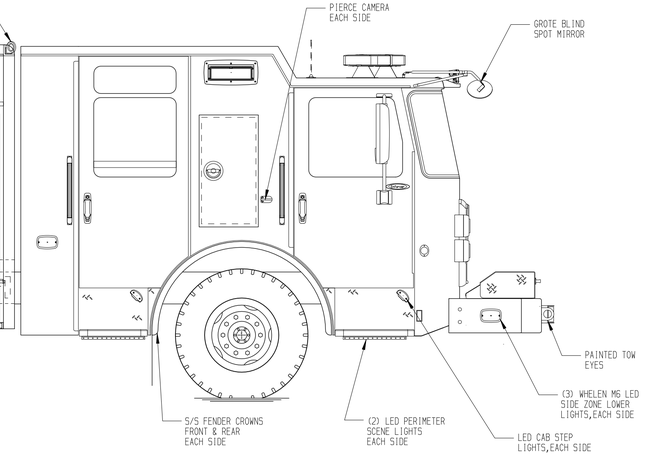

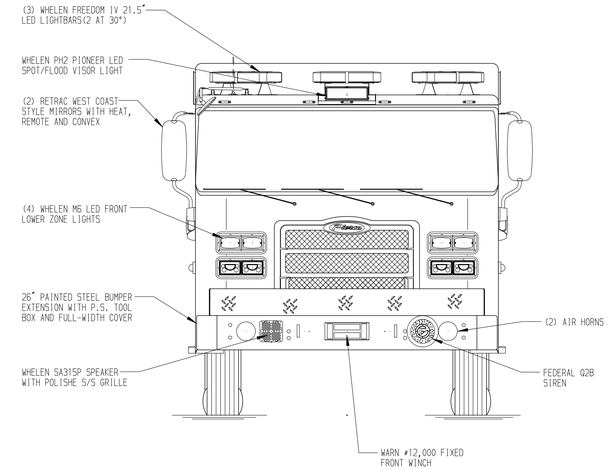

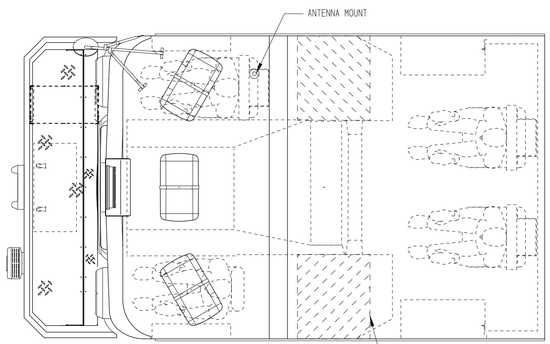

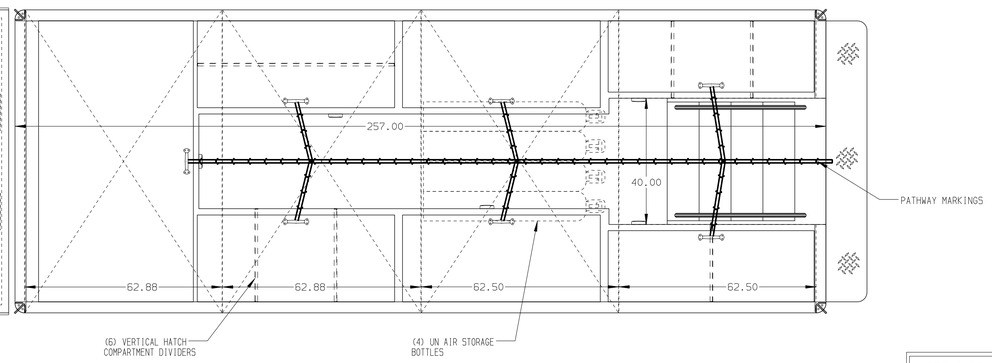

REAR COMPARTMENT CONTAINS
THE FOLLOWING:

COMPARTMENT B1 CONTAINS:
-
-
-
-

COMPARTMENT B1 CONTAINS:
- (1) 54"DP FLOOR MOUNTED SLIDE OUT TRAY
-
-
-
-
-

LEFT SIDE COMPARTMENTS
CONTAIN THE FOLLOWING:

COMPARTMENT LS1 CONTAINS:
- (1) STD DEPTH ADJ SLIDE OUT TRAY
- (1) STD DEPTH ADJ SLIDE OUT/TILT TRAY
- (1) FLOOR MOUNTED TRAY
-
-

COMPARTMENT LS2 CONTAINS:
- (1) 1/2 DEPTH ADJ SLIDE OUT/TILT TRAY
- (1) 2-WAY FLOOR MOUNTED SLIDE OUT TRAY
-
-

COMPARTMENT LS3 CONTAINS:
- (1) HORIZONTAL FLOOR EXTENSION
- (1) VERTICAL COMPARTMENT DIVIDER
- (1) 1/2 DEPTH ADJ SLIDE OUT/TILT TRAY
- (1) 2-WAY FLOOR MOUNTED SLIDE OUT TRAY
- (2) 2-WAY FLOOR MOUNTED SLIDE OUT TRAYS WITH TOOLBOARDS
- (1) 3-DRAWER C-TECH CABINET
-

COMPARTMENT LS4 CONTAINS:
- (1) KUSSMAUL PUMP PLUS 1200 CHARGER
- (1) HORIZONTAL FLOOR EXTENSION
- (2) VERTICAL COMPARTMENT DIVIDERS
- (1) TRANSVERSE RACK WITH 2 SLOTS
- (1) 10 SLOT PICKETT RACK
- (1) STOKES BASKET RACK
- (1) 2-WAY ADJ SLIDE OUT TRAY
- (1) FLOOR MOUNTED TRAY
- (1) 2-WAY FLOOR MOUNTED SLIDE OUT TRAY
- (1) 2-WAY FLOOR MOUNTED SLIDE OUT TRAY WITH TOOLBOARD
-
-

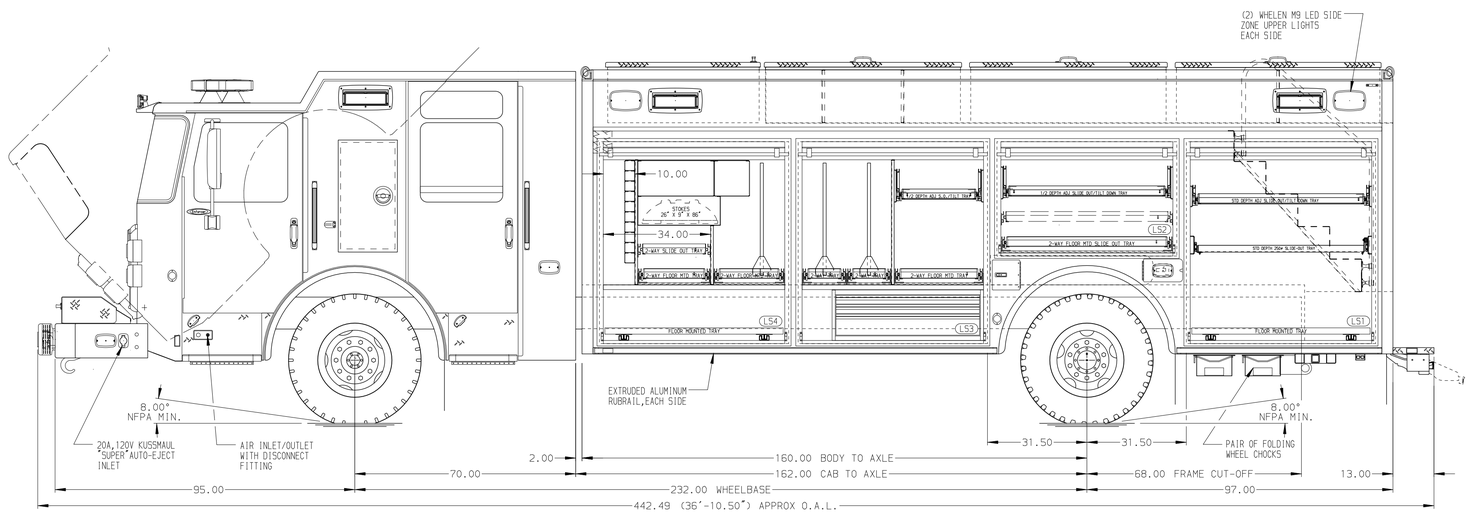

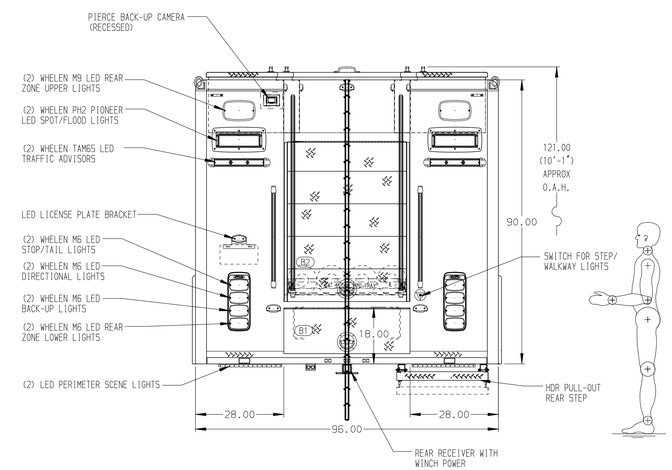

NOTE

DIMENSIONS SHOWN ARE APPROXIMATE AND ARE SUBJECT TO MINOR DEVIATIONS AS MAY OCCUR OR BE NECESSARY IN CONSTRUCTION.
MINOR DETAILS NOT SHOWN.

NOTES:
1. ONSPOT AUTOMATIC TIRE CHAINS
2. POLISHED S/S SCUFFPLATES ON CAB AND CREW CAB DOOR JAMBS
3. FLOOR IN CAB AND CREW CAB TO BE PADDED RUBBER
4. BATTERY CHARGE INDICATOR LOCATED ON THE DRIVER'S SEAT RISER
5. AMDOR LED LIGHTS IN ALL BODY AND HATCH COMPARTMENTS

CUSTOMER APPROVAL

APPROVED BY: _____

DATE: _____

REV	DATE	BY	CH
▽	-	-	-

CHASSIS DATA
MAKE: PIERCE
MODEL: EN7010

Pierce MANUFACTURING INC.

TITLE: HEAVY DUTY RESCUE NON-WALKIN
FOR: SOUTH GREENVILLE FIRE DISTRICT BID #543 — CHRIS HARRIS
DWG NO.: 36981AD

JOB NO.	36981
SCALE	1:24
DATE	
DRAWN BY	DHE
	14JAN22
CHECKED BY	AZU
	17JAN22
SHEET SIZE	D
SHEET NO.	1 OF 1

View File Created 17-JAN-2022 10:29:06