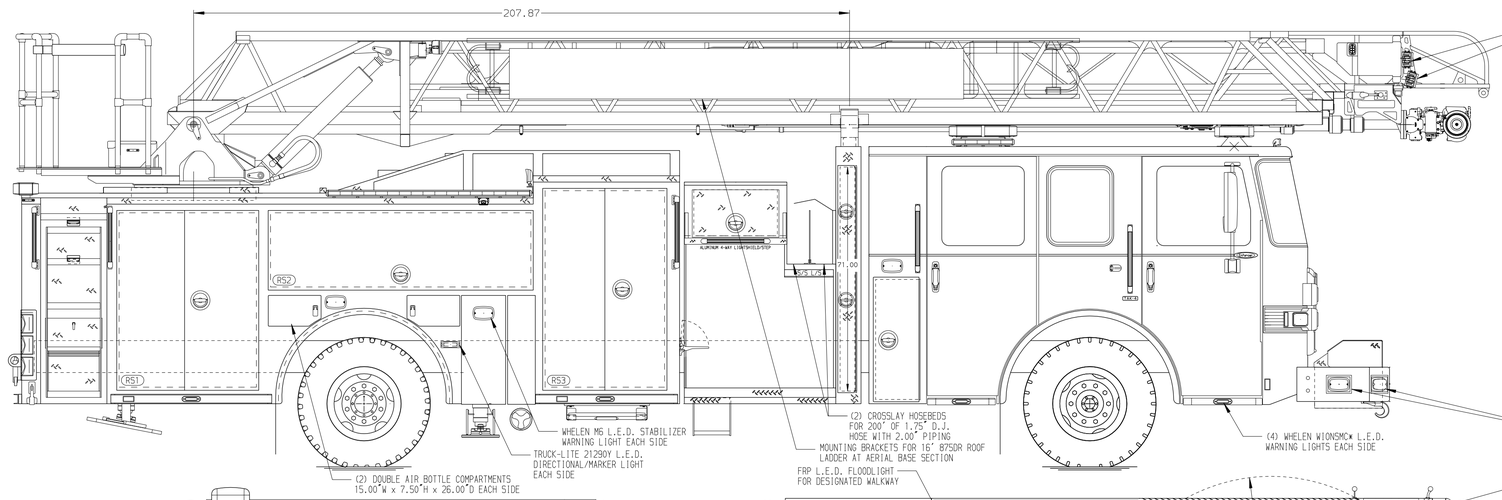

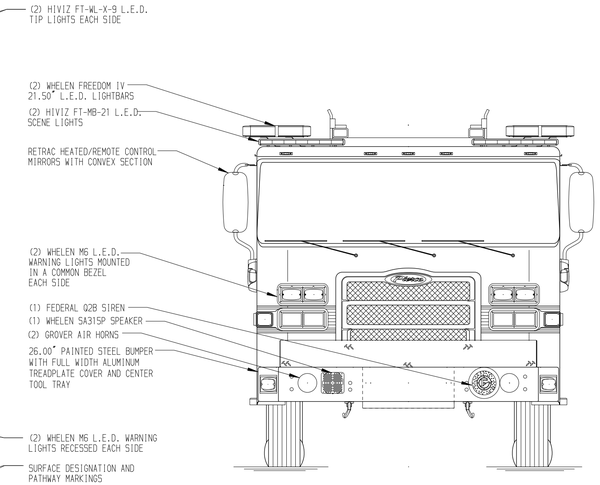

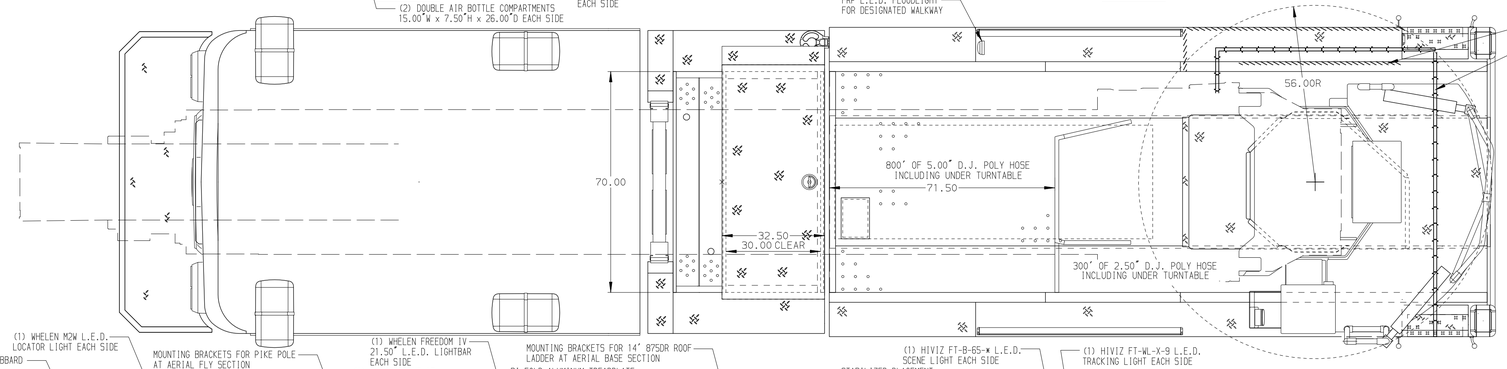

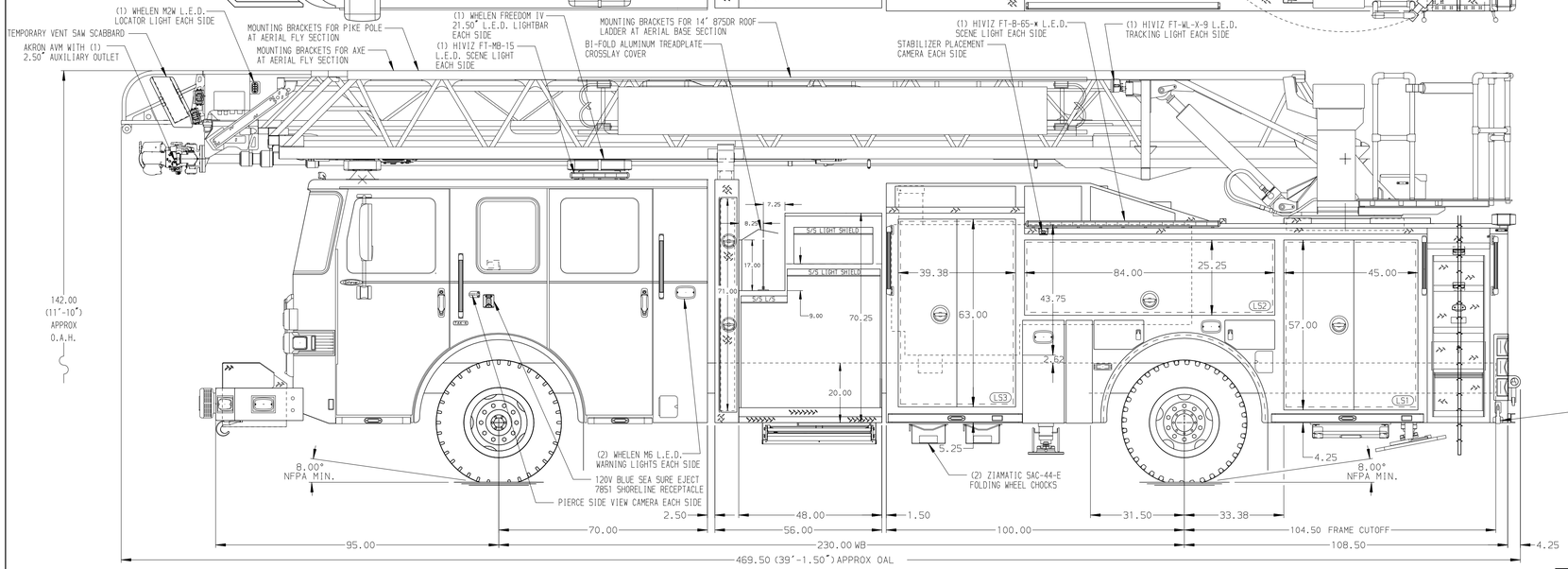

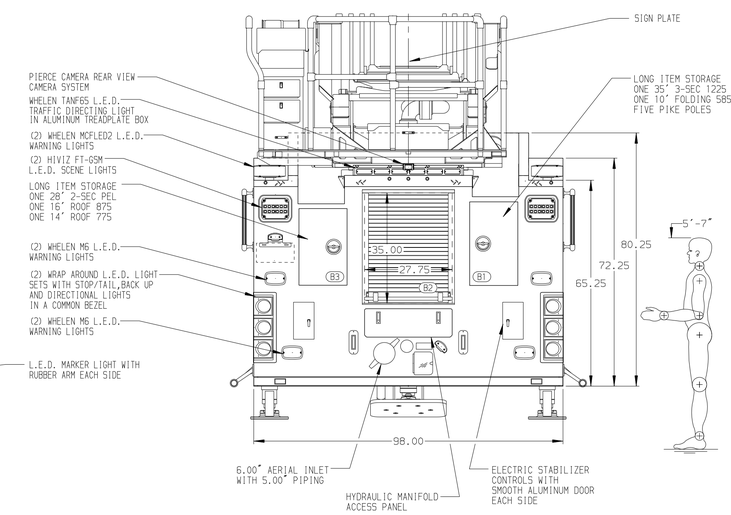

ALUMINUM BODY

SIDE ROLL AND FRONTAL IMPACT PROTECTION

CUSTOMER APPROVAL

APPROVED BY: _____

DATE: _____

Pierce MANUFACTURING INC.

JOB NO.	37036
SCALE	1:24
DATE	
DRAWN BY	JGA 03JAN22
CHECKED BY	ZCH 03JAN22
SHEET SIZE	D
SHEET NO.	1 OF 1

TITLE: 107 ASCENDANT AERIAL LADDER AND BODY ASSEMBLY
500 GALLON WATER TANK

FOR: BROOKVILLE-TIMBERLAKE VOL FIRE DEPT
FOREST, VA

CHASSIS DATA

MAKE: PIERCE

MODEL: ENFORCER

DWG NO.: 37036AD

REV	DATE	BY	CH
V	05JAN22	JGA	ZCH

NOTE

DIMENSIONS SHOWN ARE APPROXIMATE AND ARE SUBJECT TO MINOR DEVIATIONS AS MAY OCCUR OR BE NECESSARY IN CONSTRUCTION.
MINOR DETAILS NOT SHOWN.

1. PACCAR DEF TANK MOUNTED UNDER CAB ON THE DRIVER'S SIDE
2. KUSSMAUL BATTERY CHARGER/AIR COMPRESSOR LOCATED PER SHOP ORDER
3. BATTERY CHARGER INDICATOR BEHIND DRIVER'S SEAT DISPLAYED THROUGH WINDOW
4. AIR INLET WITH DISCONNECT COUPLING LOCATED PER ORDER
5. L.E.D. LIGHT STRIPS LOCATED IN HOSE BED PER SHOP ORDER
6. NINE ADJUSTABLE FULL WIDTH/FULL DEPTH SHELVES IN COMPARTMENT PER ORDER
7. FOUR FLOOR MOUNTED SLIDE-OUT TRAYS WITH SIDE SLIDES IN COMPARTMENT PER ORDER
8. ONE SWING-OUT ALUMINUM TOOL BOARD IN COMPARTMENT PER ORDER
9. ONE VERTICAL PARTITION IN COMPARTMENT PER ORDER
10. ONE ZIAMATIC SCBA HOLDER BRACKET LOCATED PER ORDER
11. PAC TRAC ON BACK WALL OF COMPARTMENT PER ORDER
12. REMOTE LADDER CONTROLS AT AERIAL TIP
13. TECNIQ L.E.D. RUNG STYLE LIGHTING ON AERIAL LADDER SECTIONS PER SHOP ORDER
14. 2-WAY INTERCOM SYSTEM BETWEEN AERIAL TIP OR PLATFORM AND TURNTABLE
15. LIFTING EYE ROPE RESCUE ATTACHMENT AT AERIAL TIP
16. 1500 GPM HIGH FLOW WATERWAY
17. TRIDENT FOLDING STEPS ON AERIAL DEVICE
18. AERIAL LIMITED RETRACTION NOT REQUIRED
19. ONE 120V 6-PLACE RECEPTACLE STRIP LOCATED IN CAB PER ORDER
20. TWO 120V DUPLEX RECEPTACLES LOCATED PER ORDER
21. GTT 794 L.E.D. OPTICOM TRAFFIC LIGHT CONTROLLER ON CAB ROOF PER ORDER

View File Created 06-JAN-2022 12:57:31