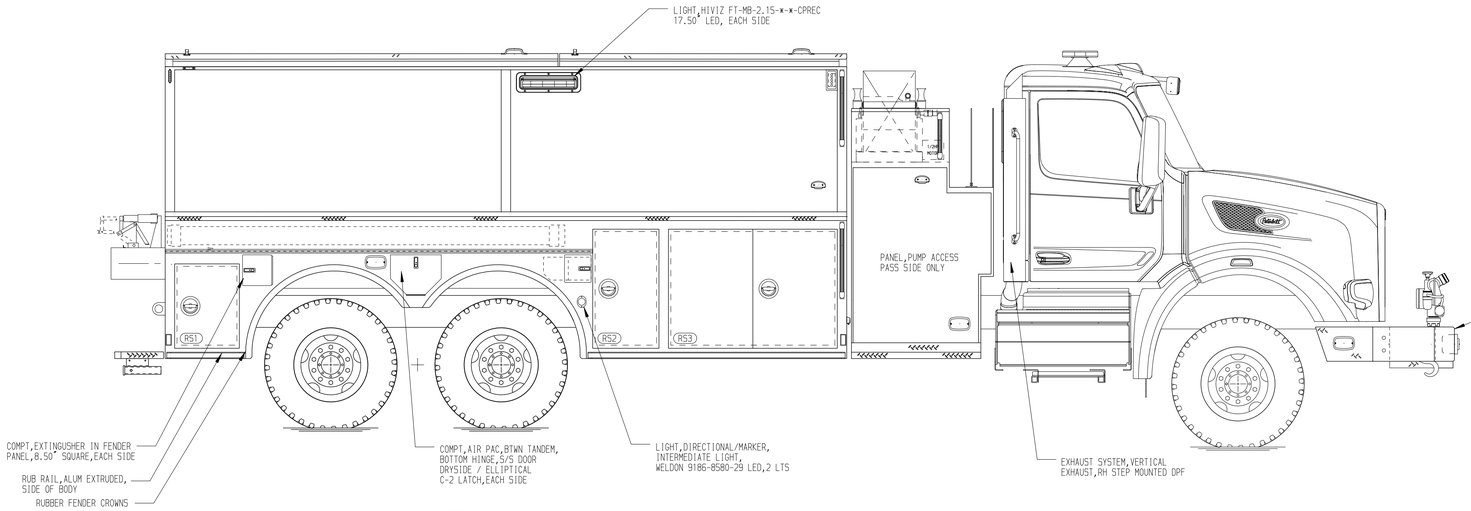

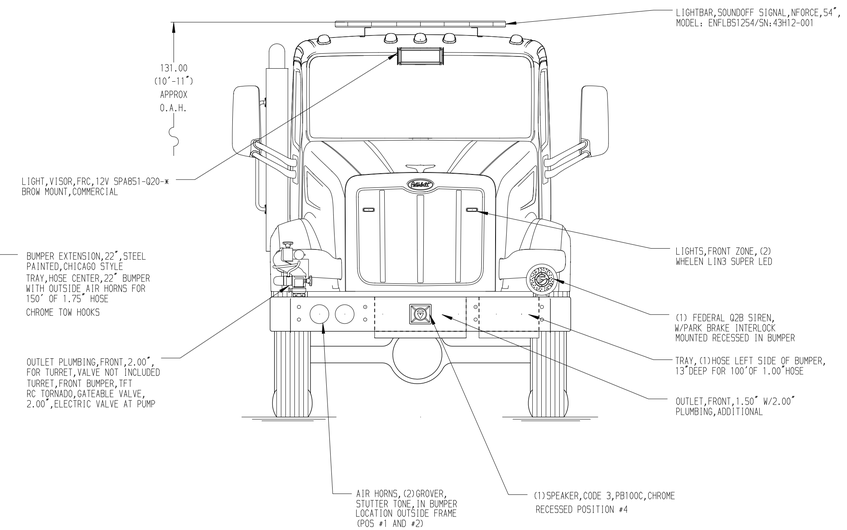

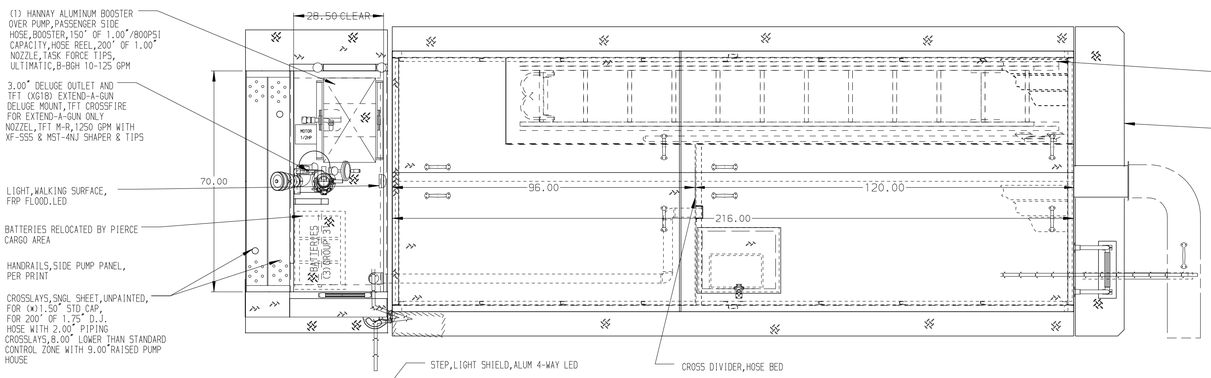

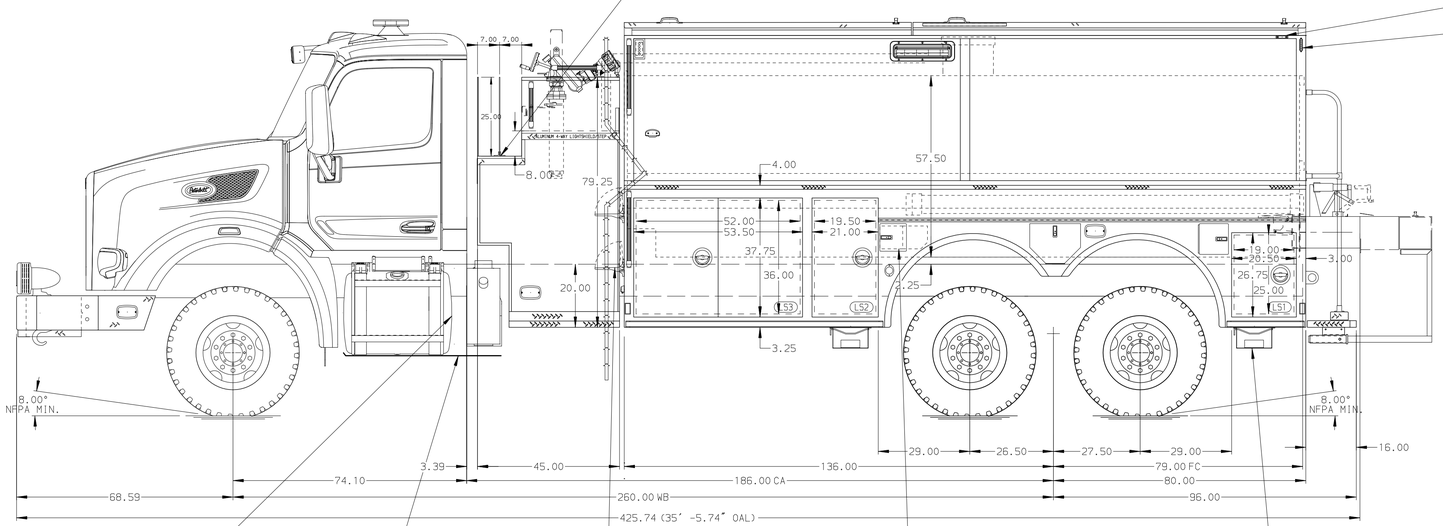

NOTE

DIMENSIONS SHOWN ARE APPROXIMATE AND ARE SUBJECT TO MINOR DEVIATIONS AS MAY OCCUR OR BE NECESSARY IN CONSTRUCTION.
MINOR DETAILS NOT SHOWN.

REV	DATE	BY	CH
▽	-	-	-

CHASSIS DATA
MAKE: PETERBILT
MODEL: 567

Pierce MANUFACTURING INC.

TITLE: 1000-D-3000 POLY 216 DRYSIDE BODY
45"SIDE CONTROL (2)1.5" & (1) 3" DELUGE,HOSE REEL

FOR: CEDAR CITY FIRE DEPARTMENT
CEDAR CITY, UT

DWG NO.: 37046AD

JOB NO.	SCALE	DRAWN BY	CHECKED BY	SHEET SIZE	SHEET NO.
37046	1:24	RHU	RWI	D	1 OF 1

DATE: 15FEB22
21FEB22

View File Created 21-FEB-2022 07:45:57