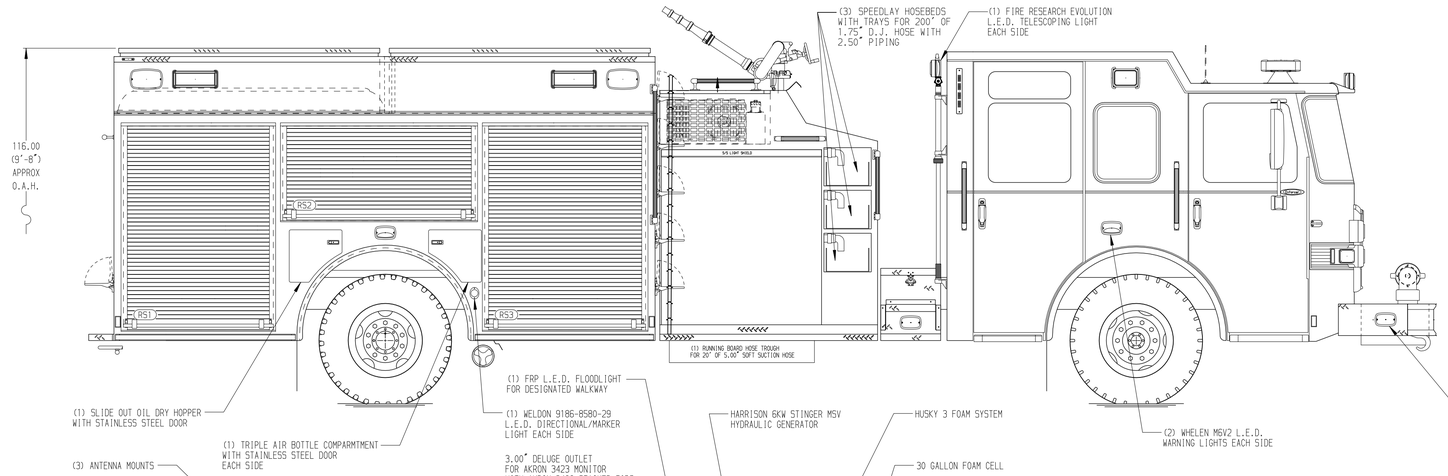

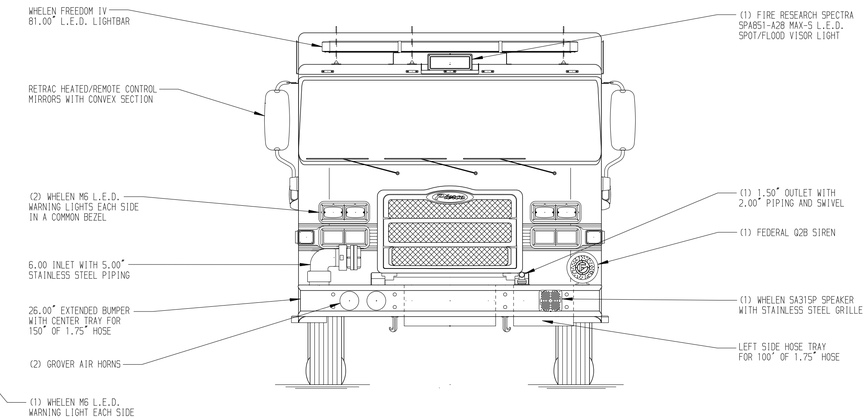

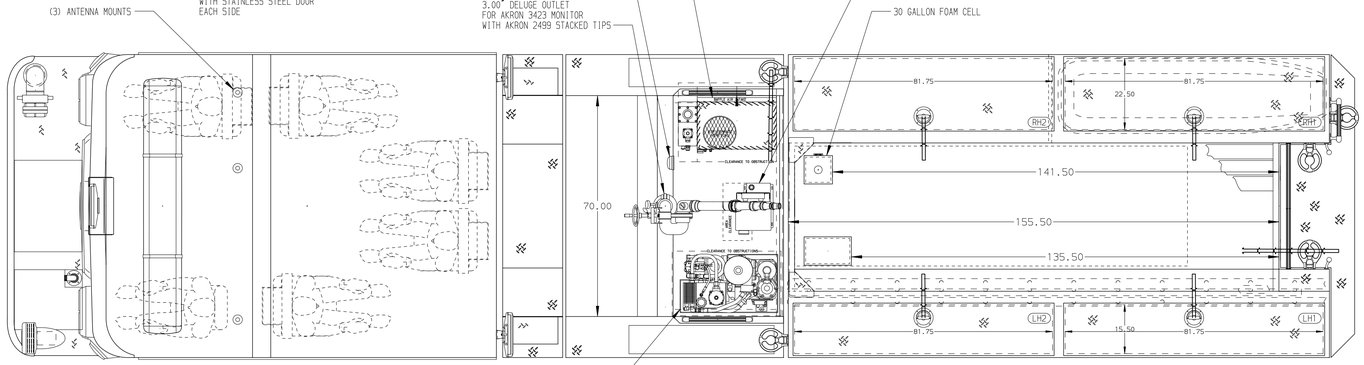

HOSEBED CAPACITIES

1. 300' OF 1.75" D.J. POLY HOSE
2. 500' OF 2.50" D.J. POLY HOSE
3. 1000' OF 5.00" D.J. POLY HOSE

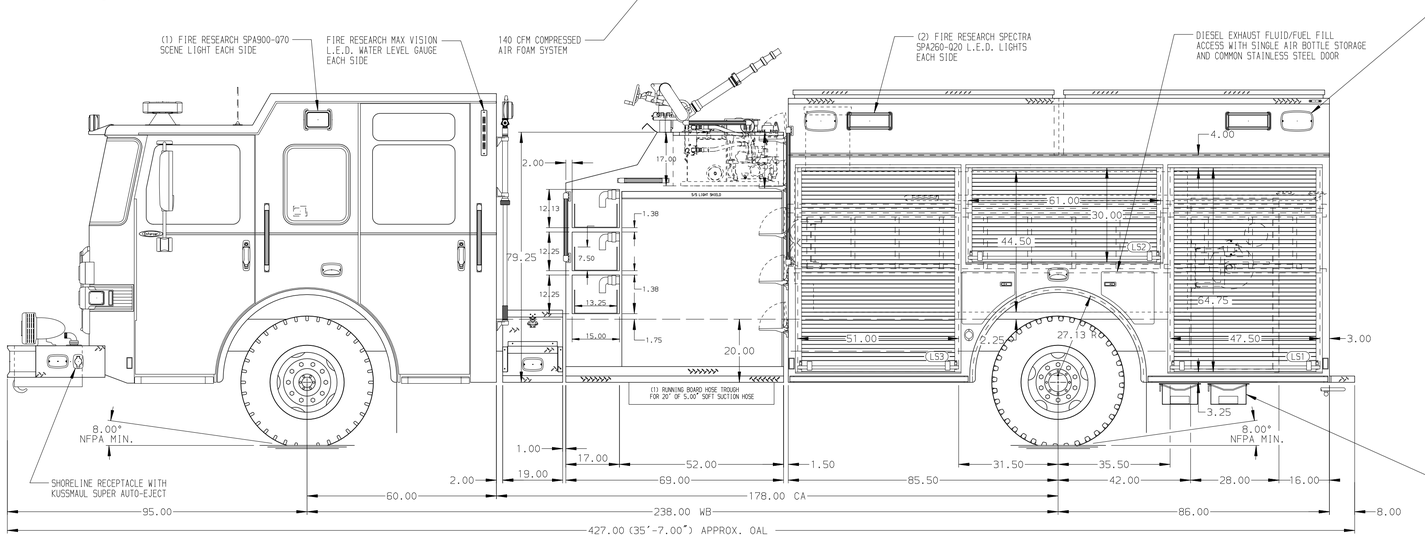

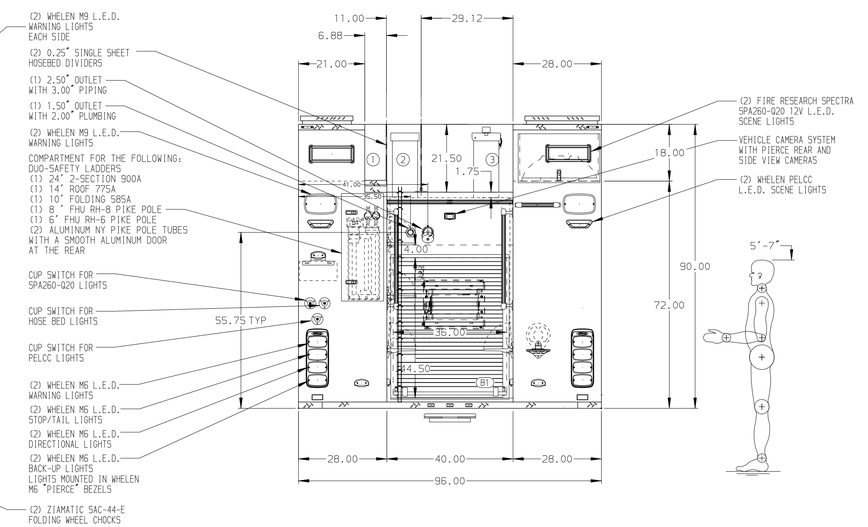

ALUMINUM BODY | MAXIMUM O.A.H. 116.00" | MAXIMUM O.A.L. 426.00"

NOTE

DIMENSIONS SHOWN ARE APPROXIMATE AND ARE SUBJECT TO MINOR DEVIATIONS AS MAY OCCUR OR BE NECESSARY IN CONSTRUCTION.
MINOR DETAILS NOT SHOWN.

1. BATTERY CHARGER LOCATED BEHIND DRIVER SEAT
2. BATTERY CHARGER INDICATOR BEHIND DRIVER'S SEAT DISPLAYED THROUGH WINDOW
3. DUAL L.E.D. LIGHT STRIPS LOCATED IN HOSE BED
4. SEVEN DRIP PAN GUARDS FOR ROLL-UP DOORS LOCATED PER SHOP ORDER
5. EIGHT FULL WIDTH/DEPTH ADJUSTABLE SHELVES IN COMPARTMENTS PER SHOP ORDER
6. TWO ADJUSTABLE SLIDE-OUT TRAYS IN COMPARTMENTS PER SHOP ORDER
7. TWO ADJUSTABLE TILTING SLIDE-OUT TRAYS IN COMPARTMENTS PER SHOP ORDER
8. THREE FLOOR MOUNTED SLIDE-OUT TRAYS IN COMPARTMENTS PER SHOP ORDER
9. ONE SLIDE-OUT TOOL BOARD WITH PEGBOARD PATTERN IN COMPARTMENT PER SHOP ORDER
10. ONE SWING-OUT TOOL BOARD WITH PEGBOARD PATTERN IN COMPARTMENT PER SHOP ORDER
11. ONE FULL HEIGHT VERTICAL PARTITION IN COMPARTMENT PER SHOP ORDER
12. ALUMINUM TREADPLATE ON THE FLOORS OF COMPARTMENT PER SHOP ORDER
13. THREE ALUMINUM PEGBOARDS ON BACK WALL OF COMPARTMENT PER SHOP ORDER
14. CIRCUIT BREAKER PANEL IN COMPARTMENT LS1
15. ONE 120V 6-PLACE RECEPTACLE STRIP LOCATED PER SHOP ORDER
16. FOUR 120V DUPLEX RECEPTACLES LOCATED LOCATED PER SHOP ORDER
17. ONE HANNAY MODEL ELFCR1622-14-16 CABLE REEL FOR 200' OF 12/3 CABLE LOCATED IN COMPARTMENT B1
18. JUMPER STUDS AT DRIVER SIDE CAB STEP
19. AIR INLET WITH DISCONNECT COUPLING LOCATED IN DRIVER'S SIDE STEPWELL

REV	DATE	BY	CH
▽	-	-	-

CHASSIS DATA
MAKE: PIERCE
MODEL: ENFORCER

CUSTOMER APPROVAL
APPROVED BY:
DATE:

Pierce MANUFACTURING INC.

TITLE: 2000-D-750P,720 GAL. WATER/30 GAL. FOAM CELL,DELUGE 171" FH FD,LADDERS THRU BODY, (3) SPEEDLAYS
FOR: BRIDGEWATER FIRE DISTRICT #3
BRIDGEWATER TOWNSHIP,NEW JERSEY
DWG NO.: 37060AD

JOB NO.	37060
SCALE 1:24	DATE
DRAWN BY JWO	15FEB22
CHECKED BY PHA	21FEB22
SHEET SIZE D	SHEET NO. 1 OF 1

View File Created 21-FEB-2022 11:18:52