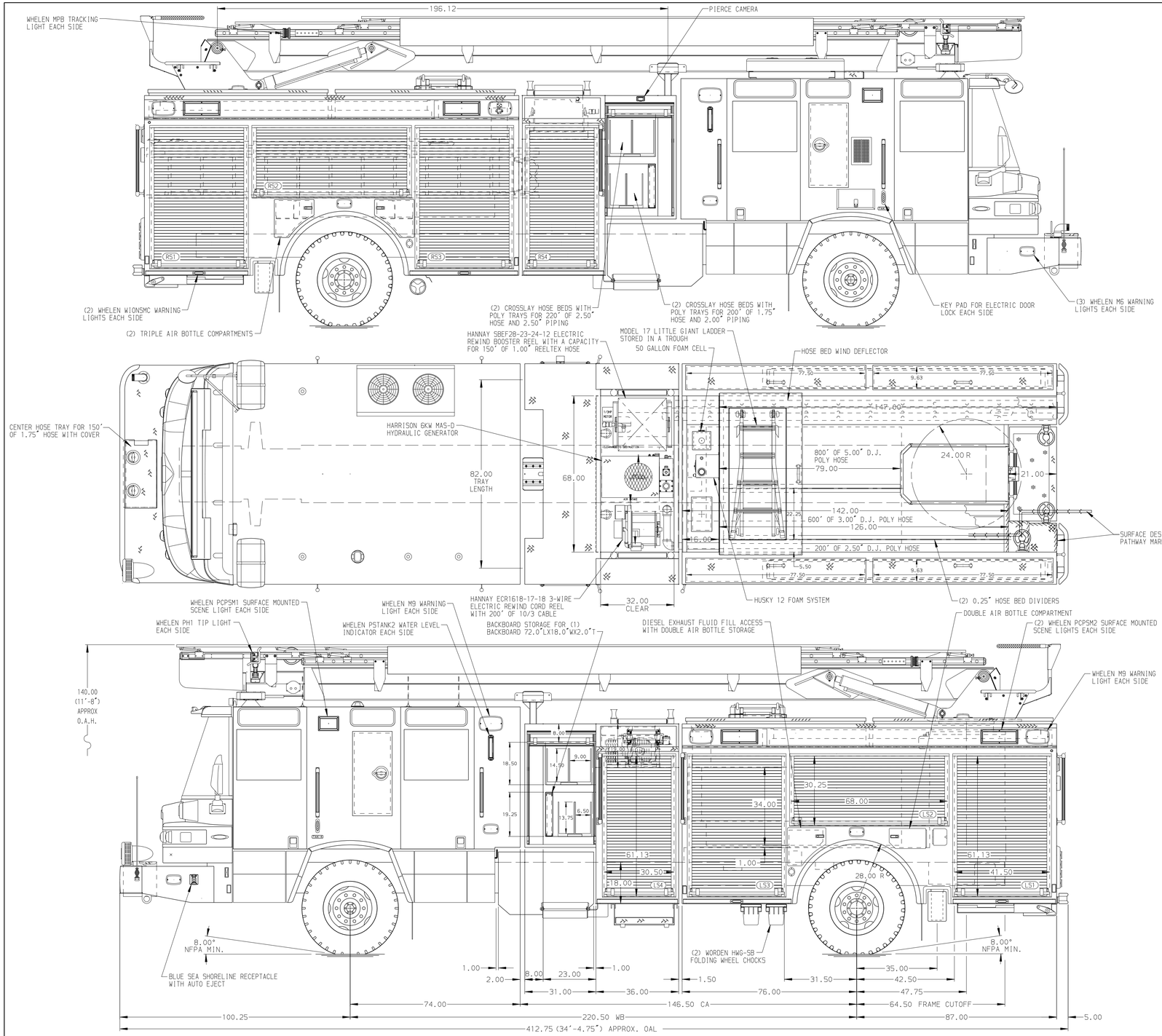

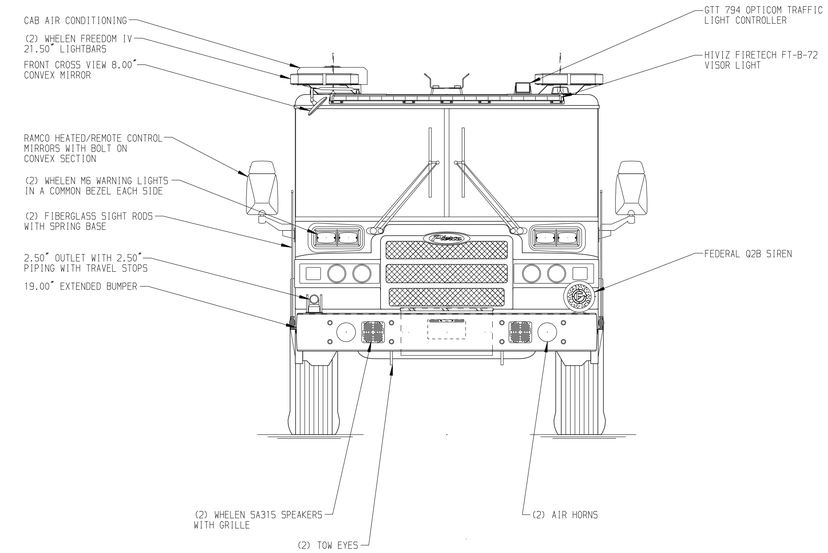

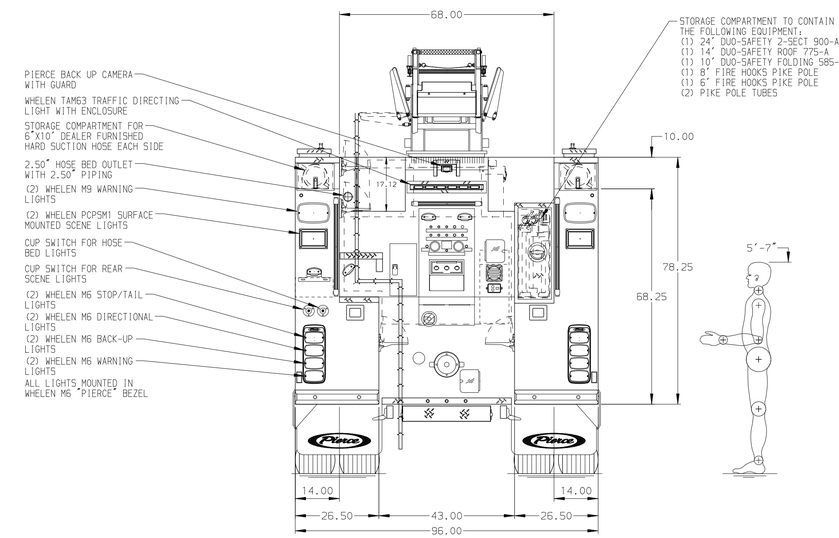

ALUMINUM BODY | SIDE ROLL AND FRONTAL IMPACT PROTECTION

NOTE

DIMENSIONS SHOWN ARE APPROXIMATE AND ARE SUBJECT TO MINOR DEVIATIONS AS MAY OCCUR OR BE NECESSARY IN CONSTRUCTION.
MINOR DETAILS NOT SHOWN.

1. AERIAL PEDESTAL RAISED 8.00"
2. AIR INLET/OUTLET WITH DISCONNECT FITTING LOCATED ON PUMP PANEL PER ORDER
3. BATTERY CHARGER LOCATED PER ORDER
4. BATTERY CHARGER INDICATOR LOCATED PER ORDER
5. TWELVE FULL WIDTH/DEPTH ADJUSTABLE SHELVES WITH SIDES LOCATED PER ORDER
6. ONE FLOOR MOUNTED SPECIAL WIDTH SLIDE-OUT TRAY WITH SIDES LOCATED PER ORDER
7. FOUR FLOOR MOUNTED SLIDE-OUT TRAYS WITH SIDES LOCATED PER ORDER
8. ONE SWING-OUT TOOLBOARD WITH PEGBOARD PATTERN LOCATED PER ORDER
9. PAC TRAC EQUIPMENT MOUNTING SYSTEM LOCATED PER ORDER
10. MERMAID CLIMATE CONTROLLED CABINET LOCATED PER ORDER
11. CIRCUIT BREAKER PANEL LOCATED PER ORDER
12. TWO 120V DUPLEX RECEPTACLES LOCATED IN CAB PER ORDER
13. THREE 120V DUPLEX RECEPTACLES LOCATED IN REAR BODY PER ORDER
14. FIRE RESEARCH 2-WAY RADIO INTERCOM SYSTEM LOCATED PER ORDER

REV	DATE	BY	CH
▽	-	-	-

CUSTOMER APPROVAL
APPROVED BY:
DATE:

Pierce MANUFACTURING INC.

CHASSIS DATA	TITLE	55' PIERCE SKYBOOM AND BODY ASSEMBLY 550 GALLON TANK-500 GAL WATER W/50 GAL FOAM CELL	JOB NO. 37061
MAKE PIERCE	FOR	YORK COUNTY DEPARTMENT OF FIRE AND LIFE SAFETY YORKTOWN, VA	SCALE 1:24
MODEL QUANTUM	DWG NO.	37061AD	DRAWN BY BST 13MAY22
			CHECKED BY CRI 13MAY22
			SHEET SIZE D
			SHEET NO. 1 OF 1

View File Created 13-MAY-2022 14:44:13