RIGHT SIDE COMPARTMENTS CONTAIN THE FOLLOWING:

COMPARTMENT RS1 CONTAINS:
- (1) 15/20A,120V DUPLEX RECEPTACLE
-
-
-

COMPARTMENT RS2 CONTAINS:
- (1) BAUER BP25H 25.2 SCFM BREATHING AIR COMPRESSOR
- BREATHING AIR PURIFIERS
-
-

COMPARTMENT RS3 CONTAINS:
- CHASSIS BATTERIES
- (2) TRANSVERSE ADJUSTABLE SHELVES
- (1) LOW PRESSURE AIR REEL W/200' OF HOSE
- (1) HIGH PRESSURE AIR REEL W/200' OF HOSE
- (2) AIR REEL CONTROL PANELS
-

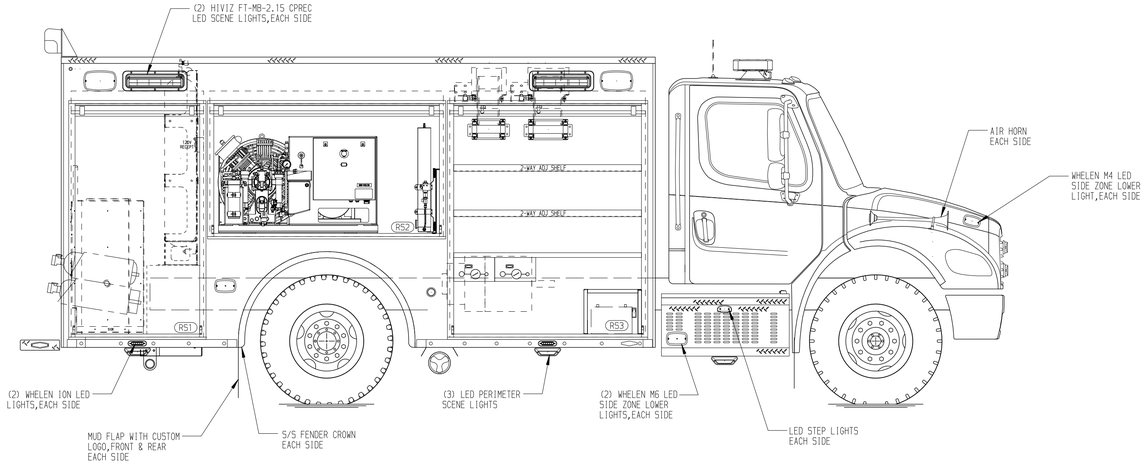

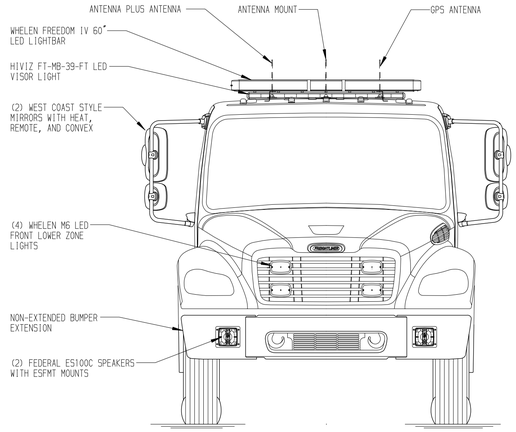

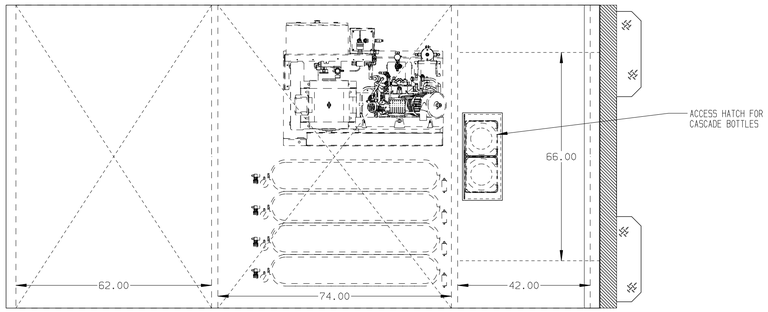

REAR COMPARTMENT CONTAINS THE FOLLOWING:

COMPARTMENT B1 CONTAINS:
- (2) RACKS FOR 18 SCBA BOTTLES
- (2) 6000 ASME AIR STORAGE BOTTLES
- (2) "SPACESAVER"2-BOTTLE FILL ENCLOSURES
- (1) CASCADE SYSTEM CONTROL PANEL
- (1) COMPRESSOR CONTROL PANEL
-
-
-
-
-
-
-
-

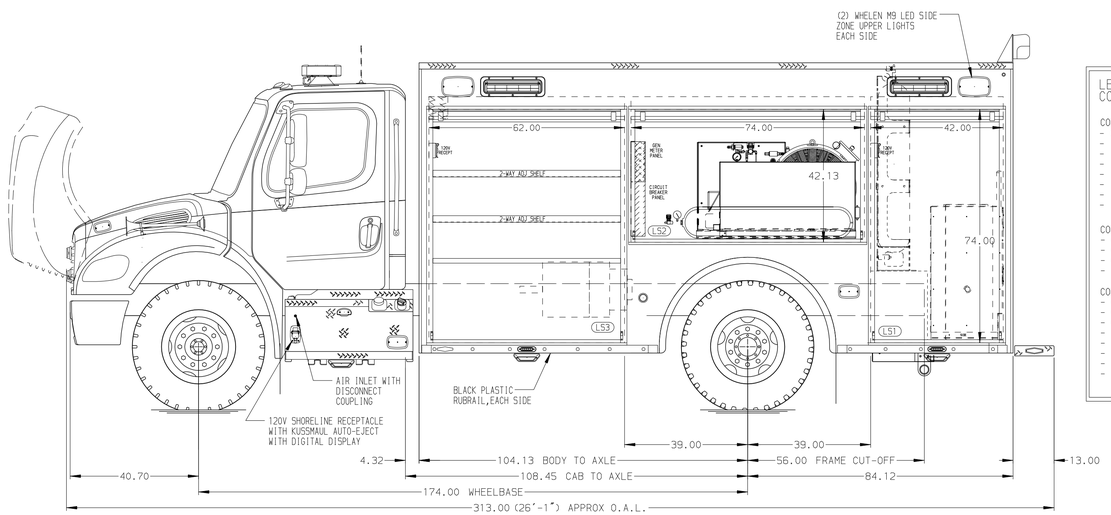

LEFT SIDE COMPARTMENTS CONTAIN THE FOLLOWING:

COMPARTMENT LS1 CONTAINS:
- (1) 15/20A,120V DUPLEX RECEPTACLE
-
-
-
-
-
-

COMPARTMENT LS2 CONTAINS:
- (1) CIRCUIT BREAKER PANEL
- (1) GENERATOR METER PANEL
- (4) 6000 ASME AIR STORAGE BOTTLES
-

COMPARTMENT LS3 CONTAINS:
- (1) KUSSMAUL PUMP PLUS 1200 CHARGER
- (2) TRANSVERSE ADJUSTABLE SHELVES
- (1) 15/20A,120V DUPLEX RECEPTACLE
-
-
-
-

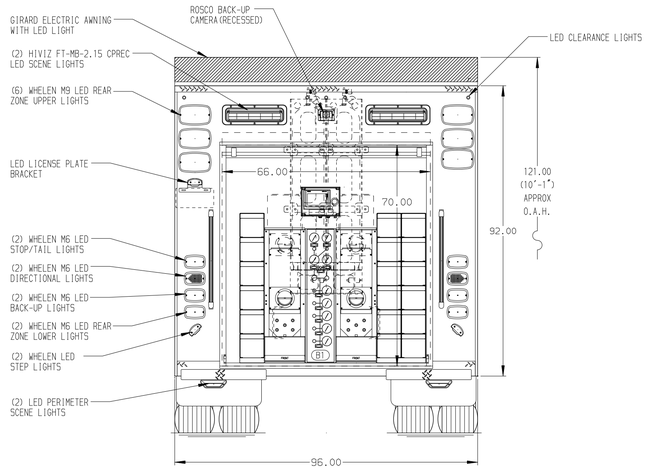

NOTE

DIMENSIONS SHOWN ARE APPROXIMATE AND ARE SUBJECT TO MINOR DEVIATIONS AS MAY OCCUR OR BE NECESSARY IN CONSTRUCTION.
MINOR DETAILS NOT SHOWN.

NOTES:
1. LIMA 40kW 3-PHASE PTO DRIVEN GENERATOR WITH SPLASH GUARD LOCATED BETWEEN THE FRAME RAILS
2. PIERCE LED LIGHTS IN ALL BODY COMPARTMENTS
3. TURTLE TILE MATTING ON FLOORS AND SHELVES IN COMPARTMENTS LS3,RS3,LS1,AND RS1
4. FIRECOM 2 POSITION INTERCOM SYSTEM
5. PULL STRAPS ON ALL BODY ROLL-UP DOORS
6. S/S L-SHAPED GUARDS ON ALL BODY ROLL-UP DOORS

DELUXE STEP PACKAGE W/50 GAL FUEL/6 GAL DEF, DS

SIDE ROLL PROTECTION

CLEAR DOOR WIDTH KEY	
AMDOR ROLL UP DOORS:	-2 1/4"
GORTITE ROLL UP DOORS:	-2 1/2"
PIERCE DOUBLE LAP DOORS:	-4 1/4"
PIERCE LIFT-UP LAP DOORS:	-1 1/2"
(EX: 60"F-F - 2 1/4"= 57 3/4" CLEAR) (F-F)= FRAME TO FRAME	

REV	DATE	BY	CH
V	13DEC21	DHE	CDK

CUSTOMER APPROVAL

APPROVED BY: _____

DATE: _____

Pierce MANUFACTURING INC.

CHASSIS DATA	TITLE	ENCORE RESCUE VEHICLE 62.74.42	JOB NO. 37072
MAKE FREIGHTLINER	FOR	PRINCE GEORGE'S COUNTY FIRE AND EMS BID #670 RANDY SCHWARTZ	SCALE 1:24
MODEL M2-106	DWG NO.	37072AD	DRAWN BY DHE / DATE 06DEC21
			CHECKED BY AZU / DATE 08DEC21
			SHEET SIZE D / SHEET NO. 1 OF 1

View File Created 13-DEC-2021 14:28:04