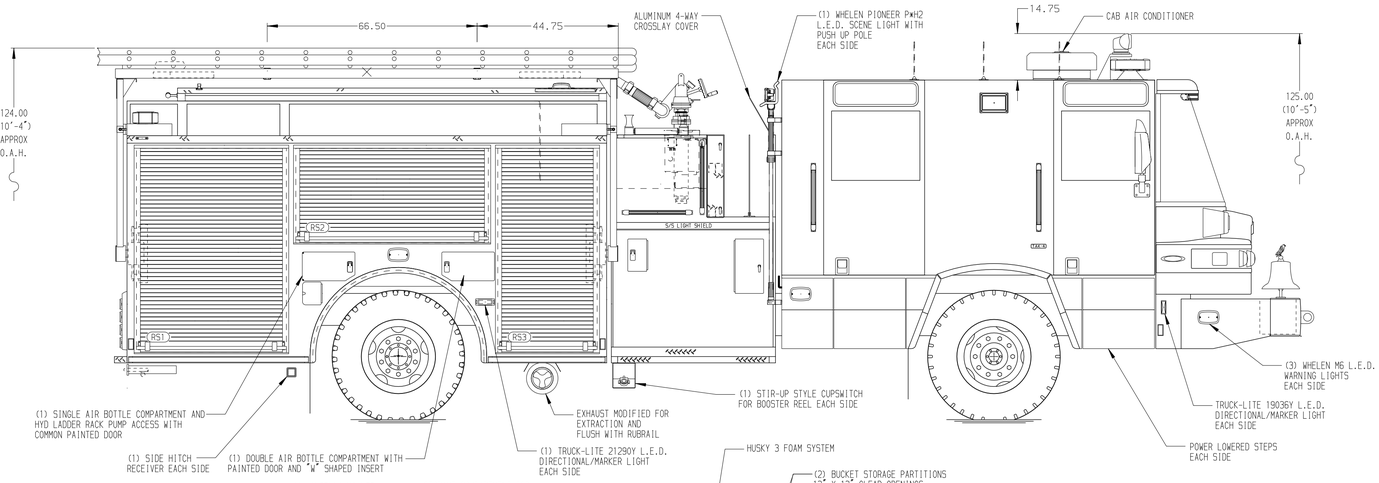

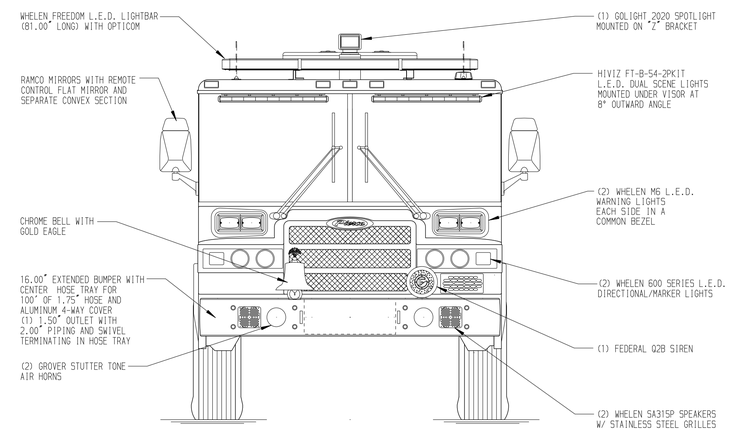

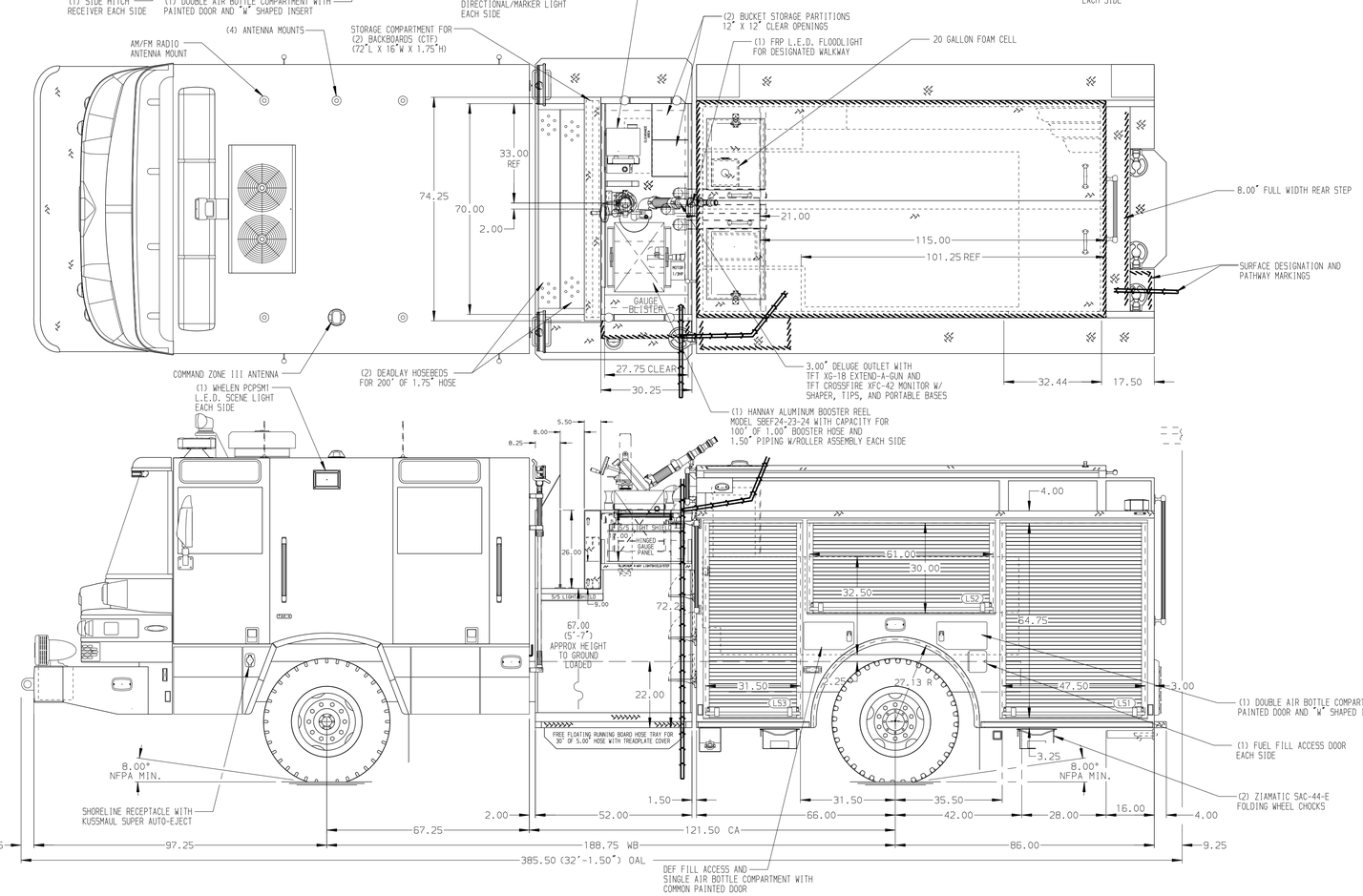

HOSEBED CAPACITIES

1. 600' OF 5.00" D.J. POLY HOSE
2. 200' OF 1.75" D.J. POLY HOSE
3. 200' OF 2.50" D.J. POLY HOSE
4. 200' OF 1.75" D.J. POLY HOSE
5. 600' OF 3.00" D.J. POLY HOSE

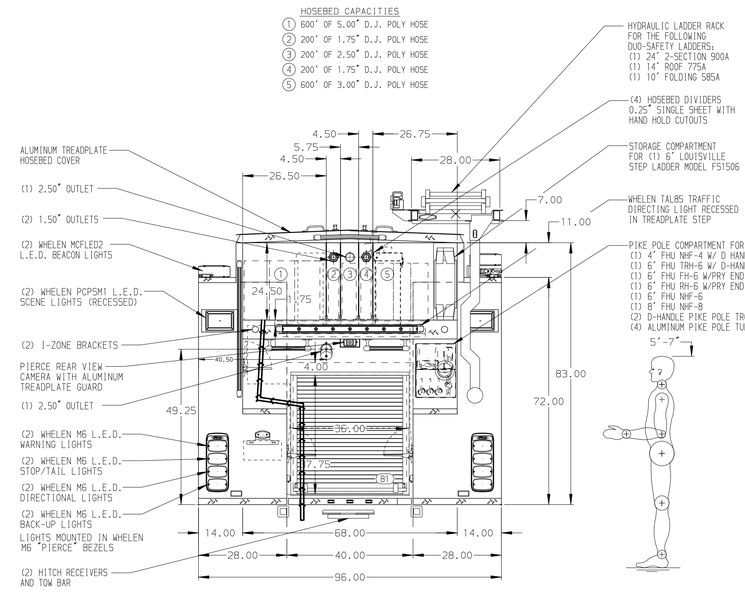

GALVANNEAL

FRONTAL IMPACT PROTECTION

CUSTOMER APPROVAL

APPROVED BY: _____

DATE: _____

Pierce MANUFACTURING INC.

JOB NO.	37089 (01-03)
SCALE	1:24
DATE	
TITLE	1500-D-520P, 500G WATER W/20 GAL FOAM, 152" FDLER (3) PRECONS, DELUGE, BOOSTER REEL, HYD LADDER RACK
FOR	FAIRFIELD FIRE DEPARTMENT FAIRFIELD, CALIFORNIA
DRAWN BY	SAM
CHECKED BY	WKL
DATE	17FEB22
DATE	17FEB22
SHEET SIZE	D
SHEET NO.	1 OF 1
DWG NO.	37089AD

REV	DATE	BY	CH
▽	-	-	-

CHASSIS DATA
MAKE: PIERCE
MODEL: QUANTUM

NOTE

DIMENSIONS SHOWN ARE APPROXIMATE AND ARE SUBJECT TO MINOR DEVIATIONS AS MAY OCCUR OR BE NECESSARY IN CONSTRUCTION.
MINOR DETAILS NOT SHOWN.

1. AIR INLET W/ DICONNECT COUPLING LOCATED ON DRIVER'S SIDE PUMP PANEL
2. AIR OUTLET WITH SHUT OFF VALVE LOCATED ON DRIVER'S SIDE PUMP PANEL
3. BATTERY CHARGER MOUNTED BEHIND DRIVER'S SIDE SEAT
4. BATTERY CHARGE INDICATOR LOCATED ON DRIVER'S SEAT RISER
5. DUAL L.E.D. LIGHT STRIPS IN HOSE BED COVER
6. SCUFFPLATE AT FRONT WALL OF HOSE BED
7. SEVEN DRIP PAN GUARDS FOR ROLL-UP DOORS LOCATED PER ORDER
8. SEVEN COMPARTMENT DUAL L.E.D. LIGHT STRIPS LOCATED PER ORDER
9. ONE FIXED FULL WIDTH/DEPTH SHELF LOCATED PER ORDER
10. NINE ADJUSTABLE FULL WIDTH/DEPTH SHELVES LOCATED PER ORDER
11. ONE ADJUSTABLE SLIDE-OUT TRAY LOCATED PER ORDER
12. TWO FLOOR MOUNTED SLIDE-OUT TRAY LOCATED PER ORDER
13. ONE CTECH DRAWER ASSEMBLY LOCATED PER ORDER
14. ONE SWING-OUT TOOL BOARD WITH PEGBOARD PATTERN LOCATED PER ORDER
15. PARTITION BETWEEN COMPARTMENTS L51/B1 AND R51/B1
16. TWO VERTICAL PARTITIONS (SPECIAL HEIGHT) LOCATED PER ORDER
17. ONE FLARED STORAGE BOX LOCATED PER ORDER
18. ONE SPECIAL SIZE LOOSE COMPARTMENT TRAY PER ORDER
19. NO LOUVERS ON COMPARTMENT R51
20. ONE ALUMINUM PEGBOARD ON THE REAR WALL LOCATED PER ORDER
21. STAINLESS STEEL SCUFFPLATE ON COMPARMENT FLOOR LOCATED PER ORDER
22. TWO HORIZONTAL EQUIPMENT MOUNTING TRACKS LOCATED PER ORDER

View File Created 17-FEB-2022 14:16:38