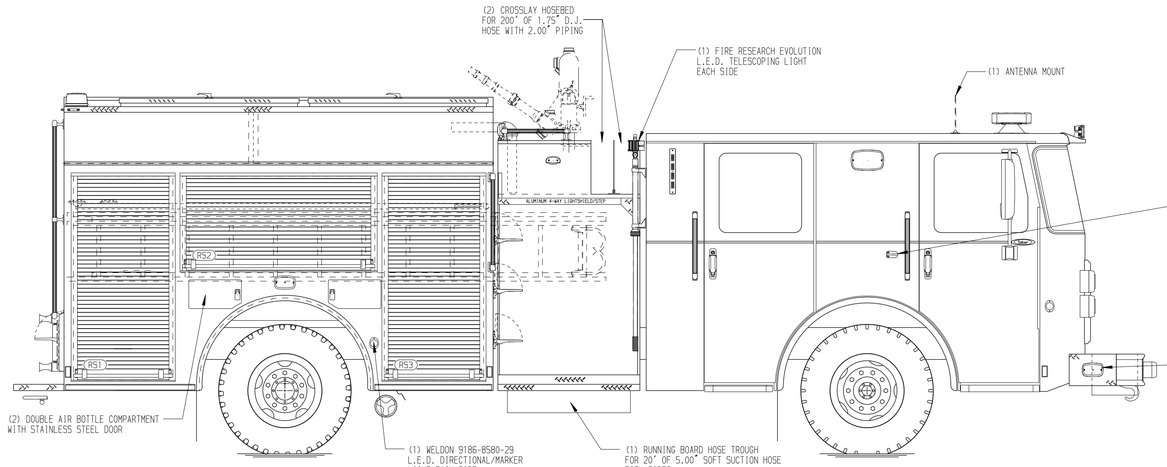

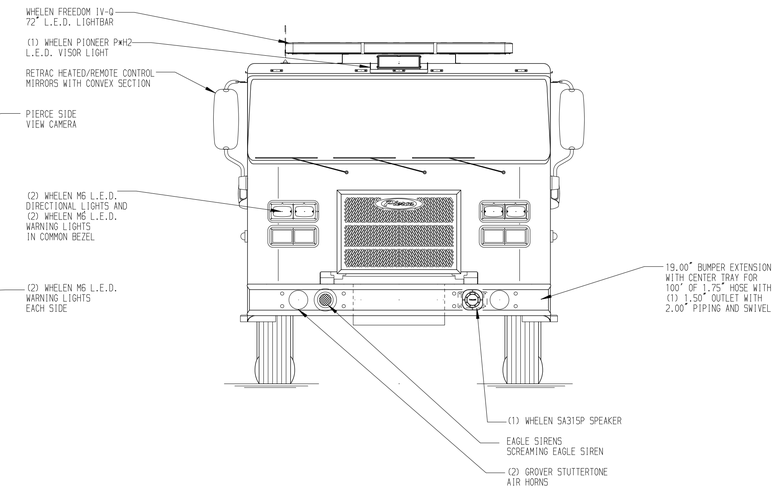

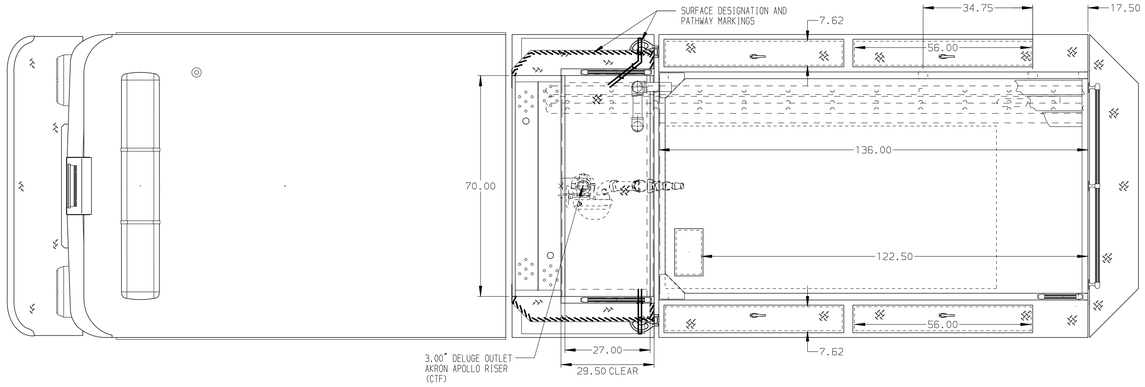

HOSEBED CAPACITIES

1. 600' OF 3.00" D.J.POLY
2. 1000' OF 5.00 D.J.POLY
3. 200' OF 2.50" D.J.POLY

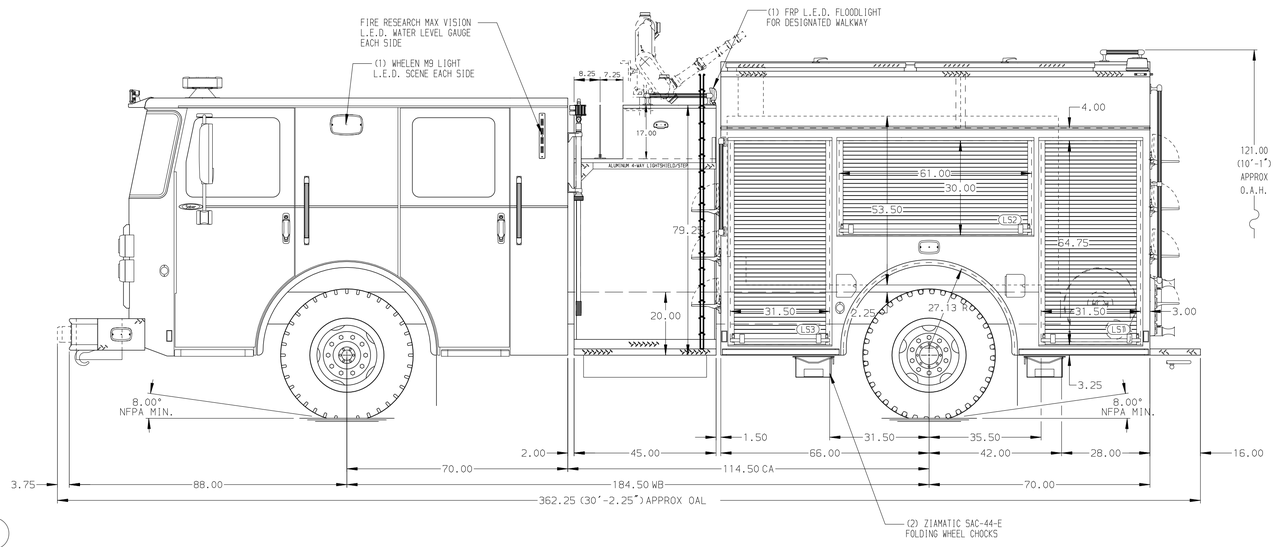

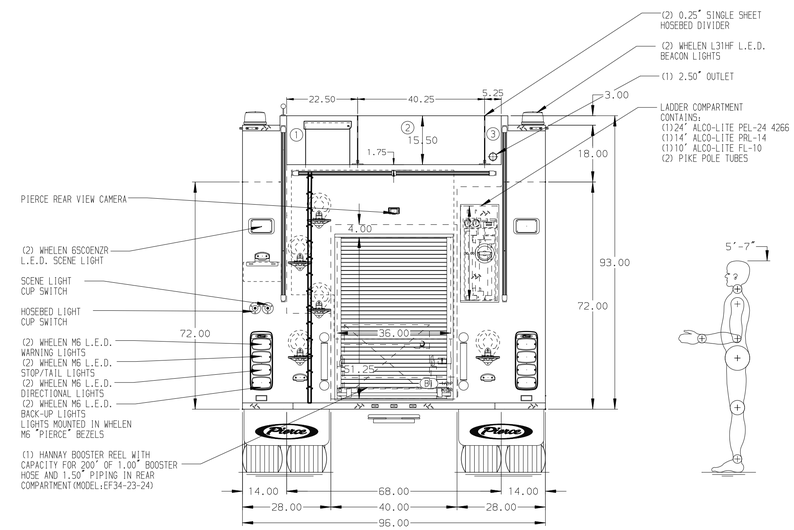

ALUMINUM BODY

NOTE

DIMENSIONS SHOWN ARE APPROXIMATE AND ARE SUBJECT TO MINOR DEVIATIONS AS MAY OCCUR OR BE NECESSARY IN CONSTRUCTION.
MINOR DETAILS NOT SHOWN.

CUSTOMER APPROVAL

APPROVED BY: _____

DATE: _____

Pierce MANUFACTURING INC.

REV	DATE	BY	CH		
				CHASSIS DATA	
				MAKE	PIERCE
7	07JAN22	CDU	CZA	MODEL	SABER FR

TITLE	1500-D-1000P 136" BODY, DS FH, PS FH FD (2)CROSSLAYS, DELUGE, BOOSTER REEL
FOR	WAYCROSS FIRE DEPARTMENT WAYCROSS, GEORGIA
DWG NO.	37094AD

JOB NO.	37094
SCALE 1:24	DATE
DRAWN BY KES	22DEC21
CHECKED BY WKL	29DEC21
SHEET SIZE D	SHEET NO. 1 OF 1

View File Created 10-JAN-2022 07:01:33