PUMPER

BODY
Long Aluminum 2nd Gen Pumper

CHASSIS
Enforcer Chassis

CHASSIS

AXLE, FRONT, CUSTOM
20,000 lb Dana Axle

AXLE, REAR
31,000 lb Dana Axle

ENGINE
450 HP Cummins L9 Engine

TRANSMISSION
Allison 5th Gen, 3000 EVS P

BUMPER
19" Extended Painted Steel

CAB
7010 Enforcer Cab

BODY

WATER TANK
1250 Gallon Poly Water Tank

COMPT, PUMPER, REAR
58.00" FF RollUp Rear Compt

COMPT, PUMPER, LEFT SIDE
171" Lap Full Height Front & Rear FDLER

COMPT, PUMPER, RIGHT SIDE
171" Lap Full Height & Depth Front & Rear

FIRE SUPPRESSION

PUMPHOUSE
52" Control Zone Side Mount

PUMP
1500 GPM Waterous CSU

CROSSLAYS, 1.50"
(2) 1.50" Standard Capacity

CROSSLAYS, 2.50"
(1) 2.50" Standard Capacity

SPEEDLAYS
Speedlays Not Required

GENERATOR
Generator Not Required

Foam System
Husky 3 Single Agent Foam System

Foam Cell
20 Gallon Foam Cell, Not Reduced Water

Side Roll and Frontal Impact Protection

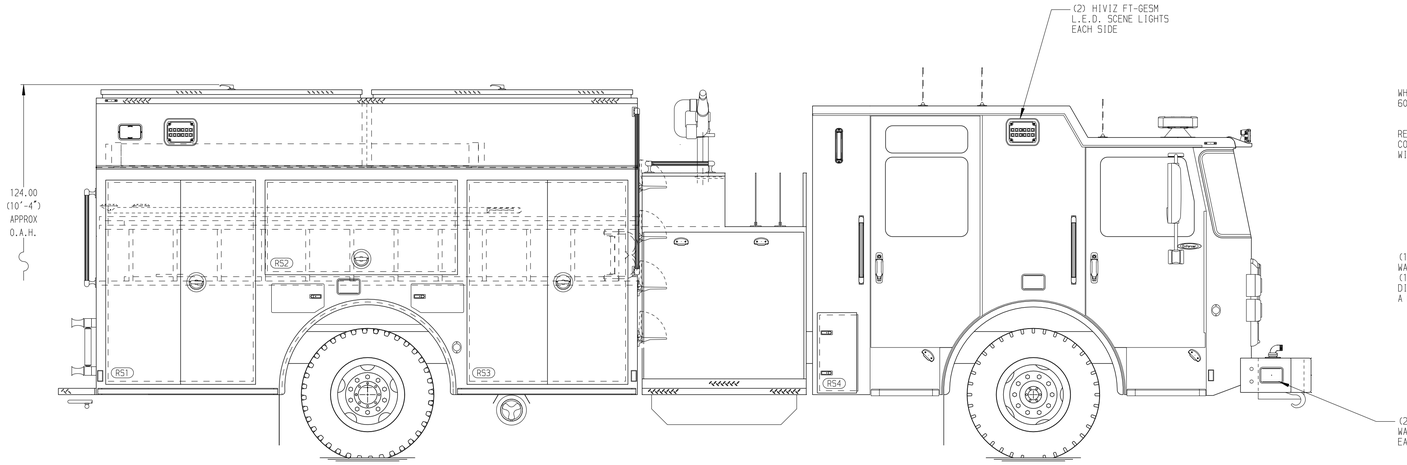

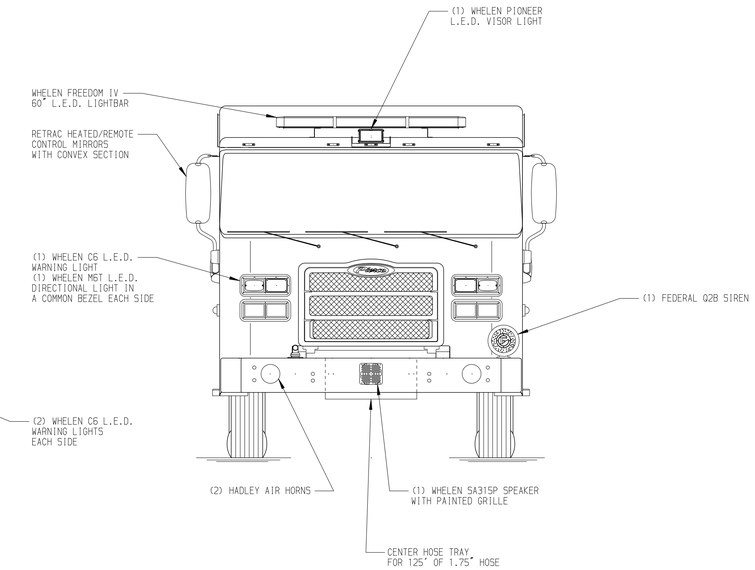

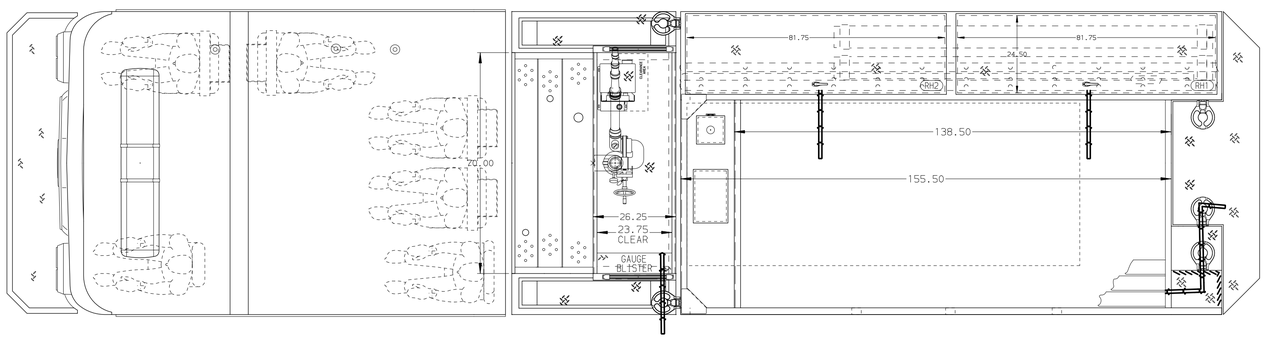

HOSEBED CAPACITY

BED 1
300' OF 2.50" D.J. POLY HOSE

BED 2
300' OF 2.50" D.J. POLY HOSE

BED 3
1000' OF 4.00" D.J. POLY HOSE

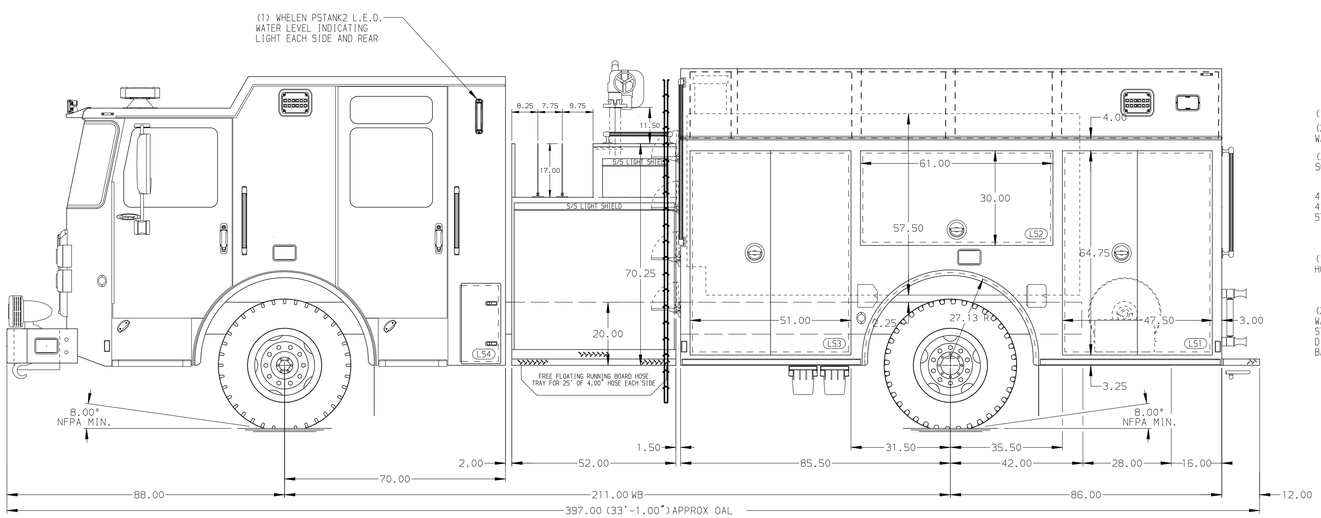

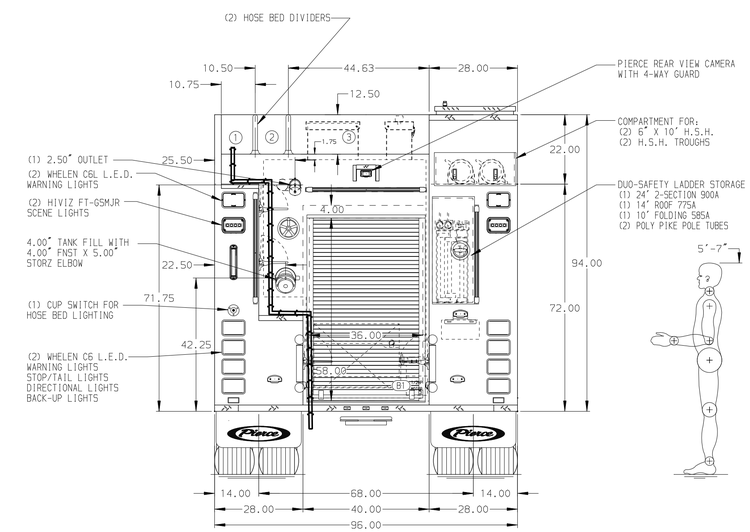

NOTE

DIMENSIONS SHOWN ARE APPROXIMATE AND ARE SUBJECT TO MINOR DEVIATIONS AS MAY OCCUR OR BE NECESSARY IN CONSTRUCTION.
MINOR DETAILS NOT SHOWN.

1. ONE 1.50 OUTLET WITH 2.00 PIPING AND SWIVEL LOCATED ON TOP BUMPER RIGHT SIDE
2. SHORELINE RECEPTACLE LOCATED ON DRIVER SIDE SEAT RISER
3. AIR INLET WITH DISCONNECT COUPLING ON DRIVER SIDE SEAT RISER
4. BATTERY CHARGER LOCATED IN COMPARTMENT PER SHOP ORDER
5. BATTERY CHARGE INDICATOR LOCATED ON THE DRIVER SIDE PUMP PANEL
6. FIVE ADJUSTABLE SHELVES LOCATED PER SHOP ORDER
7. TWO ADJUSTABLE SLIDE-OUT TRAYS LOCATED PER SHOP ORDER
8. ONE SWING-OUT TOOLBOARD LOCATED PER SHOP ORDER
9. TWO PARTITIONS IN COMPARTMENTS PER SHOP ORDER
10. PEGBOARD ON BACK WALL LOCATED PER SHOP ORDER
11. ONE RECEPTACLE LOCATED PER SHOP ORDER
12. HANNAY BOOSTER REEL EF34-23-24 LOCATED IN B1 WITH CAPACITY FOR 200' OF 1.00" BOOSTER HOSE
13. AUTOMATIC TIRE CHAINS

REV	DATE	BY	CH
V	08DEC21	MMF	AST
V	08DEC21	MMF	AST
V	28OCT21	MMF	AST

CHASSIS DATA
MAKE: PIERCE
MODEL: ENFORCER

Pierce MANUFACTURING INC.

TITLE: Pierce Pumper Approval Drawing
FOR: Center Harbor Fire Department
DWG NO.: 37096AD

JOB NO.	37096
SCALE	1:24
DATE	
DRAWN BY	MMF 30AUG21
CHECKED BY	COL 09SEP21
SHEET SIZE	D
SHEET NO.	1 OF 1

View File Created 08-DEC-2021 13:28:27