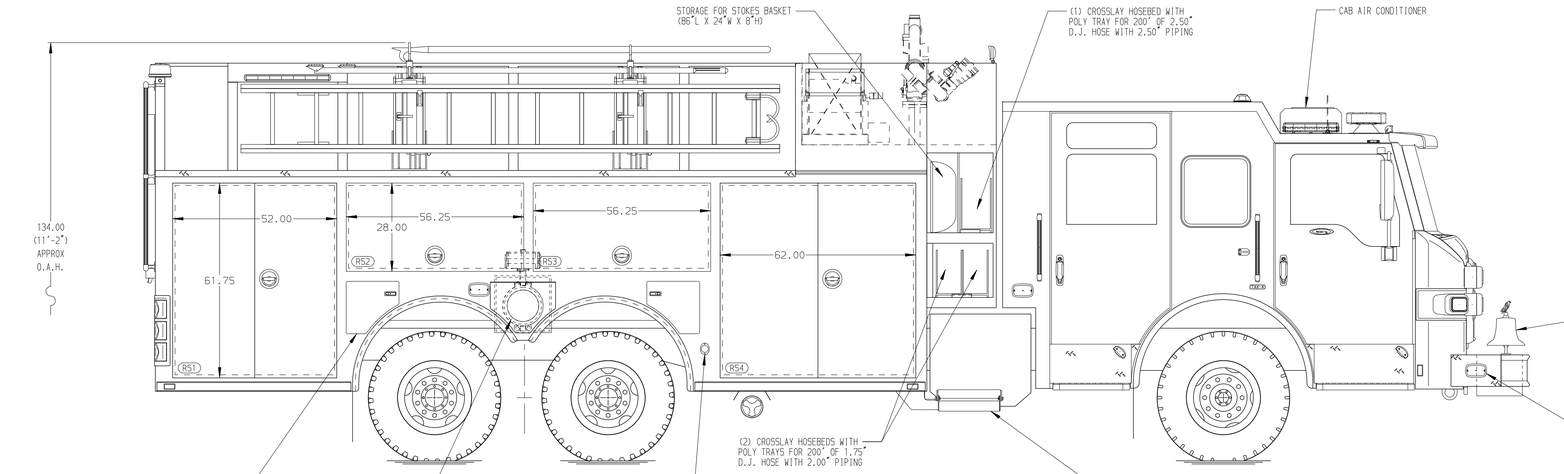

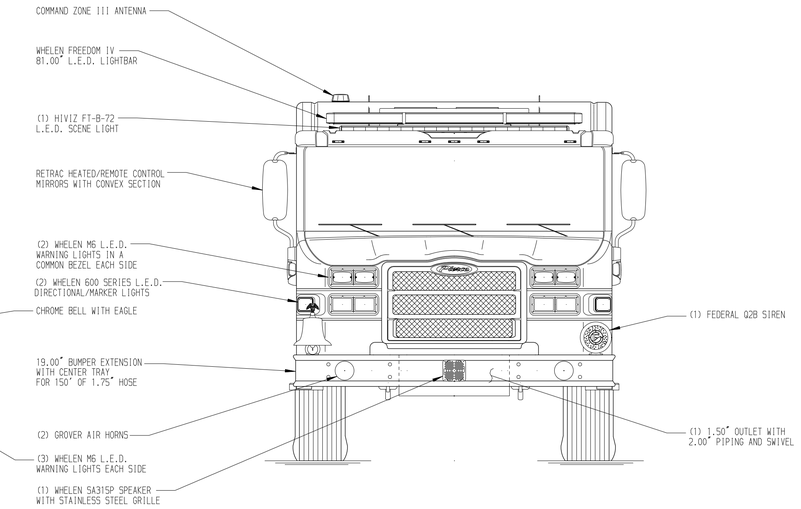

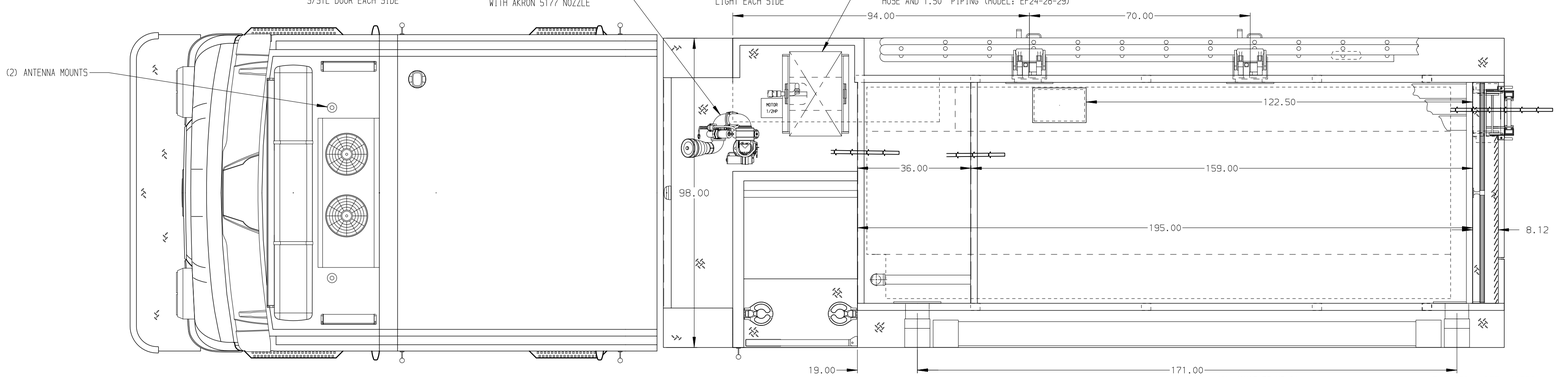

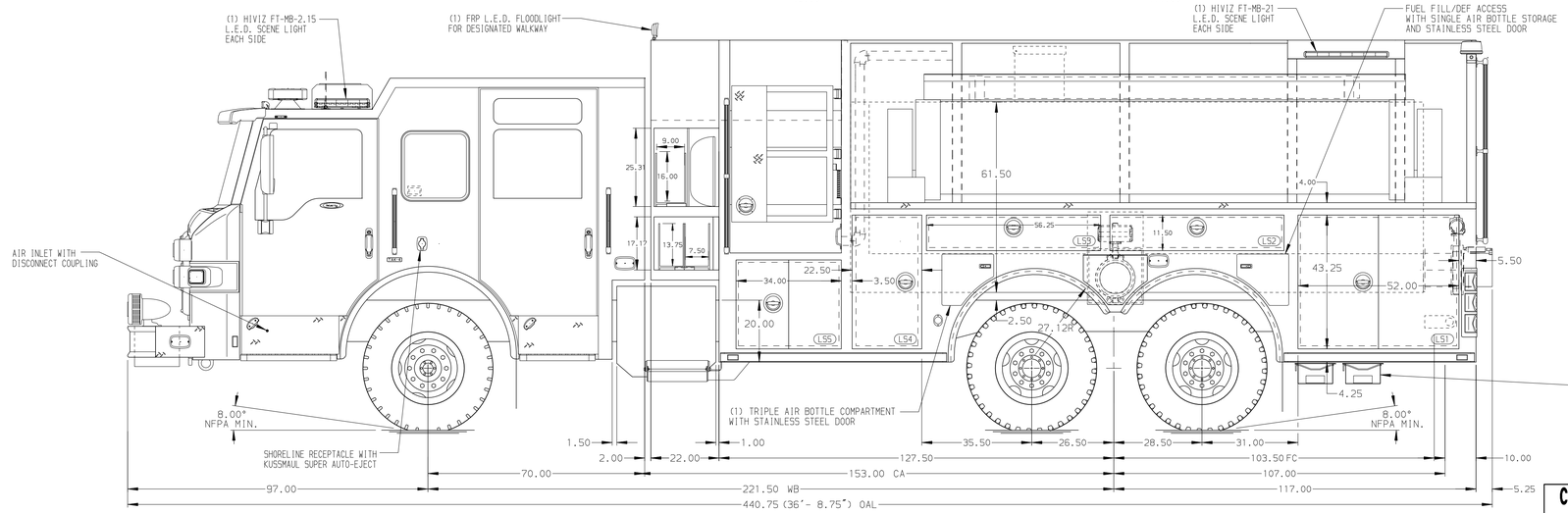

HOSEBED CAPACITIES

1. 250' OF 3.00" D.J. POLY HOSE
2. 1000' OF 5.00" D.J. POLY HOSE
3. 200' OF 2.50" D.J. POLY HOSE

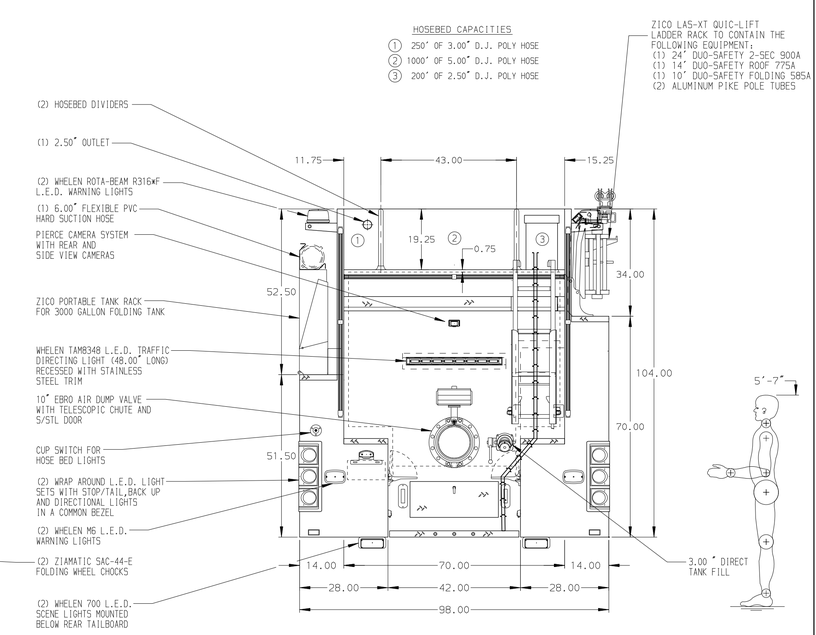

ALUMINUM BODY

SIDE ROLL AND FRONTAL IMPACT PROTECTION

NOTE

DIMENSIONS SHOWN ARE APPROXIMATE AND ARE SUBJECT TO MINOR DEVIATIONS AS MAY OCCUR OR BE NECESSARY IN CONSTRUCTION.
MINOR DETAILS NOT SHOWN.

1. ONSPOT AUTOMATIC TIRE CHAINS TO BE PROVIDED AT REAR
2. BATTERY CHARGER/COMPRESSOR LOCATED IN COMPARTMENT LS4
3. BATTERY CHARGER INDICATOR BEHIND DRIVER'S SEAT DISPLAYED THROUGH WINDOW
4. DUAL L.E.D. LIGHT STRIPS LOCATED IN HOSE BED
6. ONE 120V 6-PLACE RECEPTACLE STRIP LOCATED PER SHOP ORDER

REV	DATE	BY	CH
-	-	-	-

CHASSIS DATA
MAKE: PIERCE
MODEL: VELOCITY FR

CUSTOMER APPROVAL
APPROVED BY:
DATE:

Pierce MANUFACTURING INC.

TITLE: 1500-D-2500 GAL WATER TANK, 244" PUC TANKER
ZICO LADDER RACK RS, 3000G HYDRAULIC TANK RACK LS
FOR: SMITHTON FIRE DEPARTMENT
SMITHTON, ILLINOIS
DWG NO. 37120AD-SH1

JOB NO.	37120
SCALE	1:24
DATE	
DRAWN BY	JWO
	14FEB22
CHECKED BY	EGO
	24FEB22
SHEET SIZE	D
SHEET NO.	1 OF 1

View File Created 24-FEB-2022 14:51:31