RIGHT SIDE COMPARTMENTS
CONTAIN THE FOLLOWING:

COMPARTMENT RS1 CONTAINS:

- (1) FILL ENCLOSURE, 2 BOTTLE, BAUER CFS5.5-2M
PROVISIONS FOR "BLOW OUT" PANEL FOR FILL STATIION

COMPARTMENT RS2 CONTAINS:
- (1) TRAY,SLIDE OUT,TWO WAY,TRANSVERSE COMPT,ADJUST HEIGHT,500 LB CAPACITY
- (2)STORAGE BIN,AIR BOTTLES

COMPARTMENT RS4 CONTAINS:
- (1) TRAY,FLOOR MOUNTED UTILITY,2-WAY SLIDE OUT,500#,3"SIDES,FULL TRANS

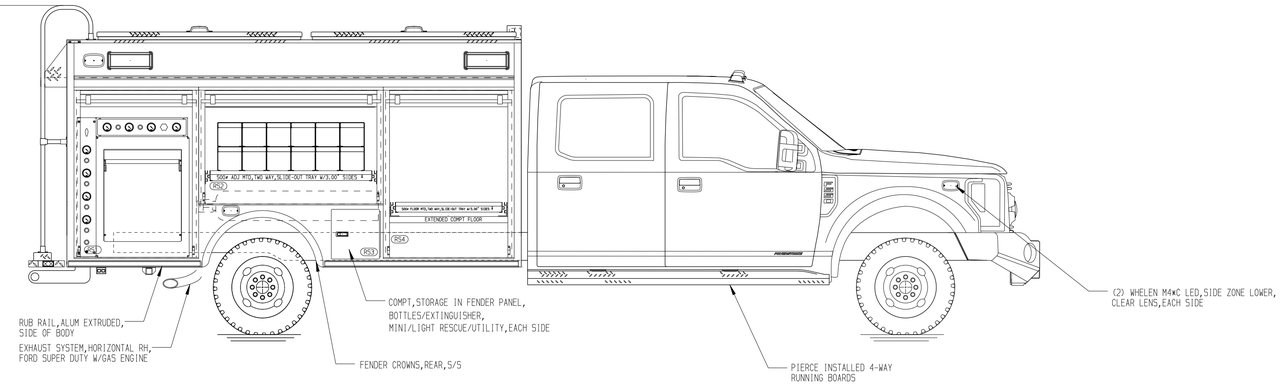

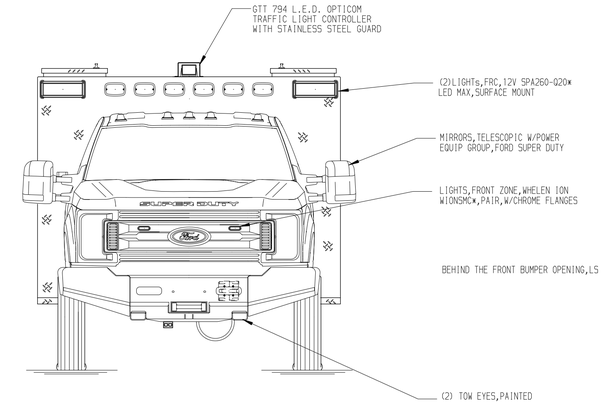

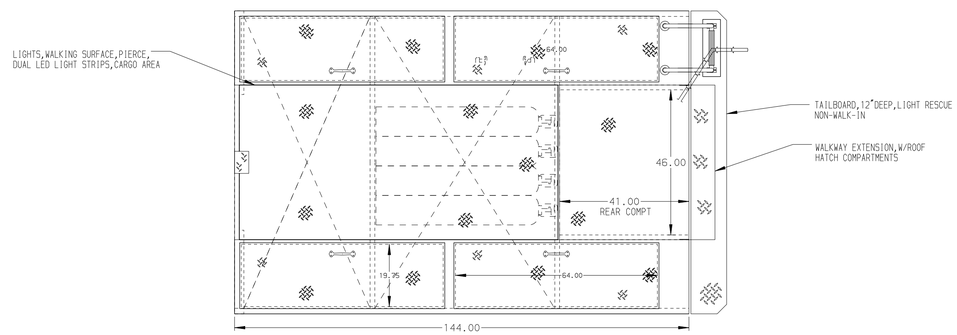

REAR COMPARTMENT B1 CONTAINS
THE FOLLOWING:

COMPARTMENT B1 CONTAINS:
- (1) TRAY,SLIDE OUT,FULL DEPTH/FULL WIDTH, 2.00"SIDES, FLOOR MOUNTED,500# CAP.

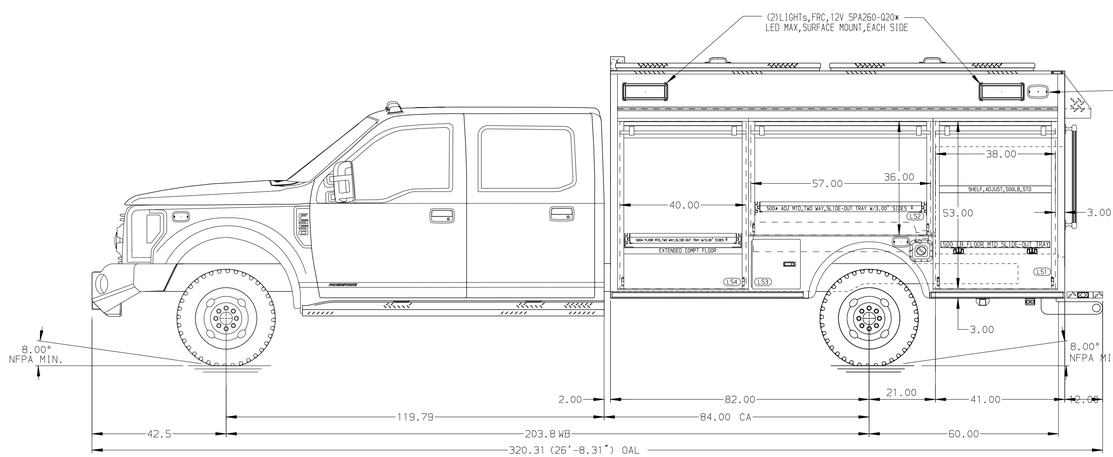

LEFT SIDE COMPARTMENTS
CONTAIN THE FOLLOWING:

COMPARTMENT LS1 CONTAINS:
- (1) TRAY,SLIDE OUT, 2.00" SIDES, FLOOR MOUNTED,500# CAP.
- (1) SHELF,ADJUSTABLE,500LB CAP. STANDARD DEPTH COMPT

COMPARTMENT LS2 CONTAINS:
- (1) TRAY,SLIDE OUT,TWO WAY,TRANSVERSE COMPT,ADJUST HEIGHT,500 LB CAPACITY

COMPARTMENT LS4 CONTAINS:
- (1) TRAY,FLOOR MOUNTED UTILITY,2-WAY SLIDE OUT,500#,3"SIDES,FULL TRANS

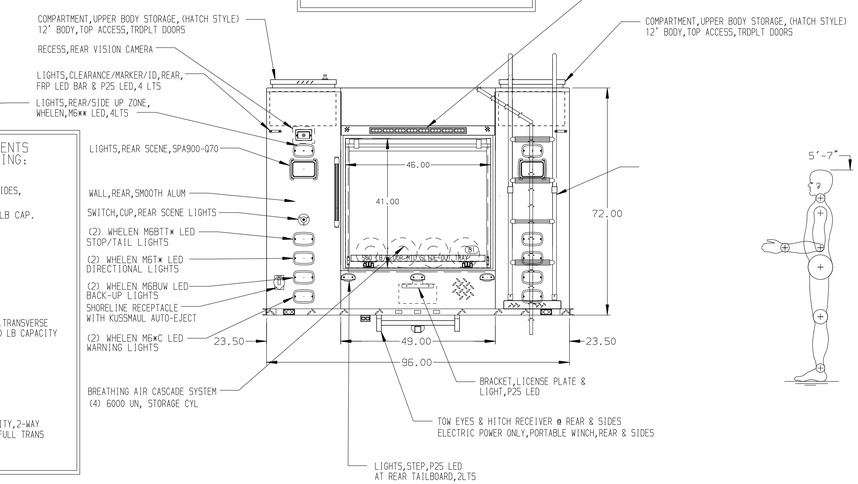

ALUMINUM BODY

NOTE
DIMENSIONS SHOWN ARE APPROXIMATE AND ARE SUBJECT TO MINOR DEVIATIONS AS MAY OCCUR OR BE NECESSARY IN CONSTRUCTION.
MINOR DETAILS NOT SHOWN.

REV.	DATE	BY	CHK'D
▽	-	-	-

CHASSIS DATA
CHASSIS FORD
MODEL F-550 4X4

Pierce MANUFACTURING INC.
BRADENTON, FLORIDA

TITLE	12' RESCUE,NON-WALK-IN –	JOB NO. 37121	DATE 20JAN22
FOR	MANSFIELD MANSFIELD, TEXAS	SCALE 1:24	DRAWN BY RHU
DRWG. NO.	37121AD	SHEET NO. 1 OF 1	CHK'D BY RWI
			SHEET SIZE D

View File Created 25-JAN-2022 08:36:07