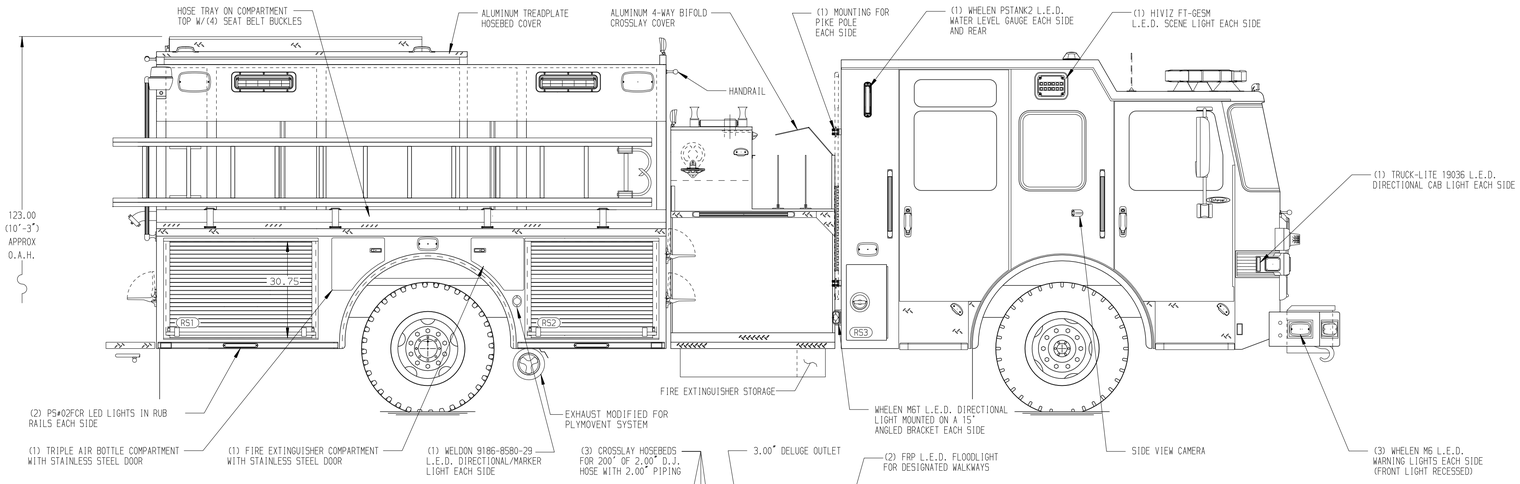

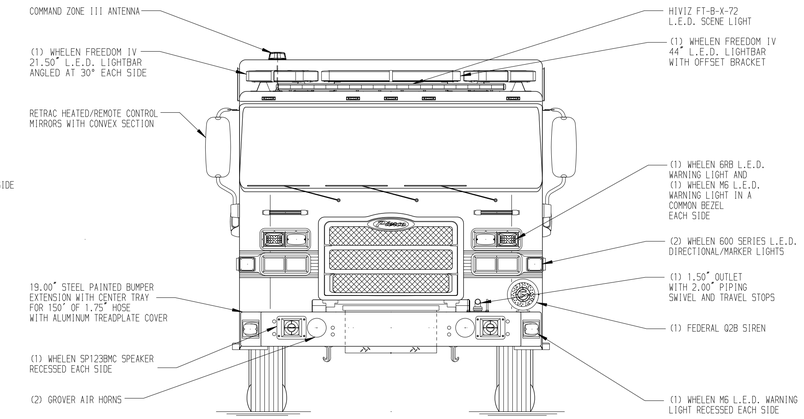

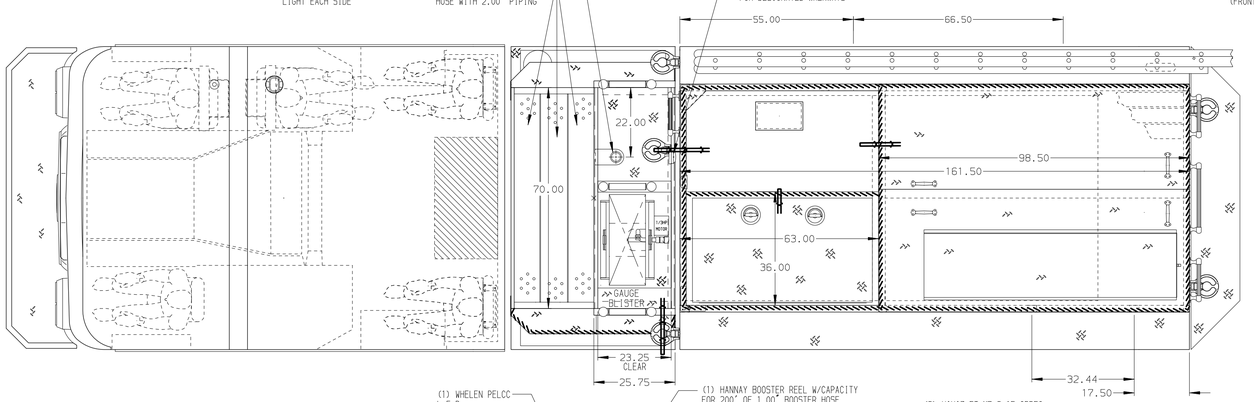

HOSEBED CAPACITIES

1. 150' OF 3.00" D.J. HOSE
2. 500' OF 3.00" D.J. HOSE
3. 1200' OF 5.00" D.J. HOSE
4. 150' OF 3.00" D.J. HOSE
5. 200' OF 1.75" D.J. HOSE

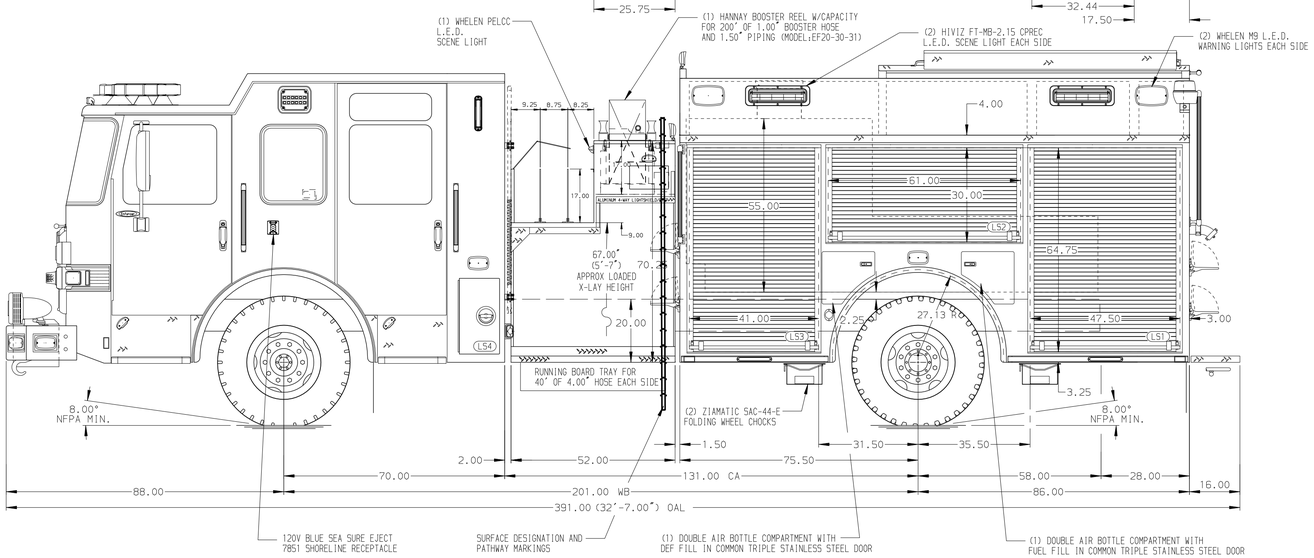

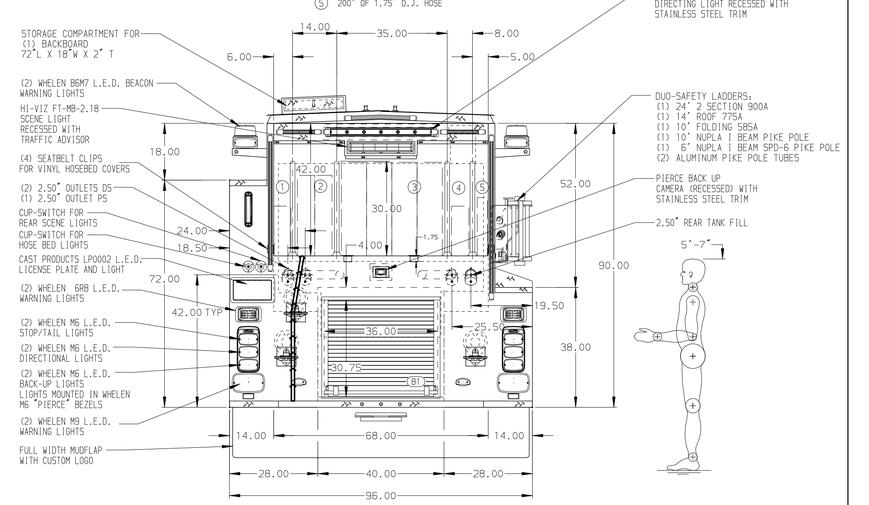

ALUMINUM BODY

SIDE ROLL AND FRONTAL IMPACT PROTECTION

NOTE

DIMENSIONS SHOWN ARE APPROXIMATE AND ARE SUBJECT TO MINOR DEVIATIONS AS MAY OCCUR OR BE NECESSARY IN CONSTRUCTION.
MINOR DETAILS NOT SHOWN.

1. AIR INLET WITH DISCONNECT COUPLING LOCATED ON DRIVER'S SIDE PUMP PANEL
2. BATTERY CHARGER LOCATED BEHIND DRIVER'S SEAT
3. BATTERY CHARGER INDICATOR BEHIND DRIVER'S SEAT DISPLAYED THROUGH WINDOW
4. MOUNTING ONLY FOR CTF FHU PIKE POLES ONE EACH SIDE OF BACK WALL OF CAB

REV	DATE	BY	CH
▽	-	-	-

CUSTOMER APPROVAL

APPROVED BY:

DATE:

Pierce MANUFACTURING INC.

CHASSIS DATA	
MAKE	PIERCE
MODEL	ENFORCER
TITLE	1500-D-1000P,161",FULL HEIGHT D.S.,LOW P.S.,FLDER (3) X-LAYS, DELUGE, LADDERS ON PASSENGER SIDE SHEET
FOR	FAYETTEVILLE FIRE DEPARTMENT FAYETTEVILLE, NORTH CAROLINA
DWG NO.	37130AD-SH1
JOB NO.	37130 01-02
SCALE	1:24
DATE	
DRAWN BY	BTH 22FEB22
CHECKED BY	SMA 01MAR22
SHEET SIZE	D
SHEET NO.	1 OF 2

View File Created 01-MAR-2022 08:41:44