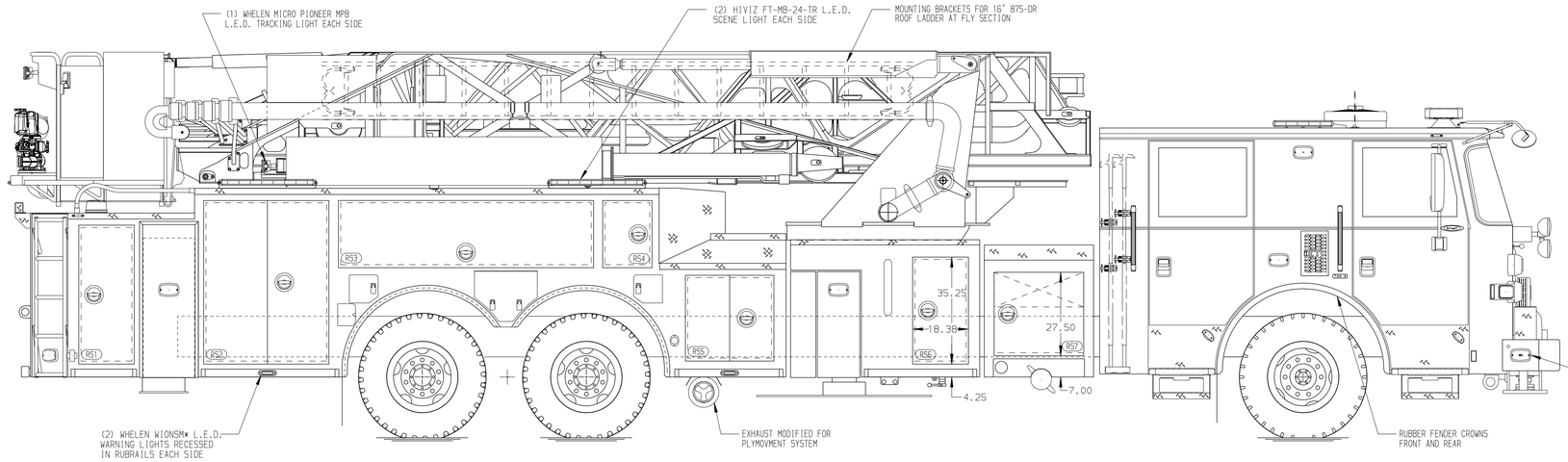

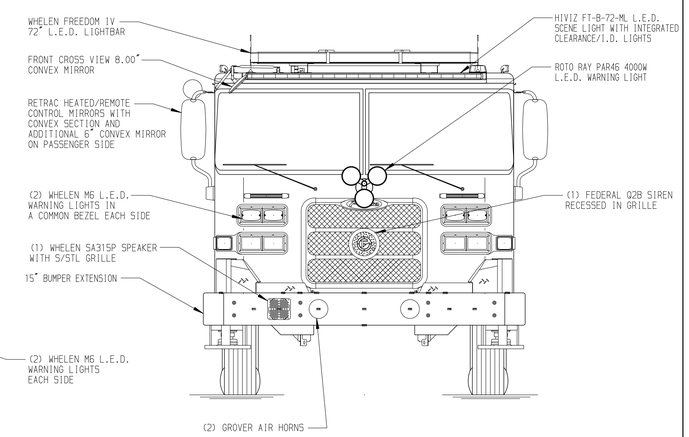

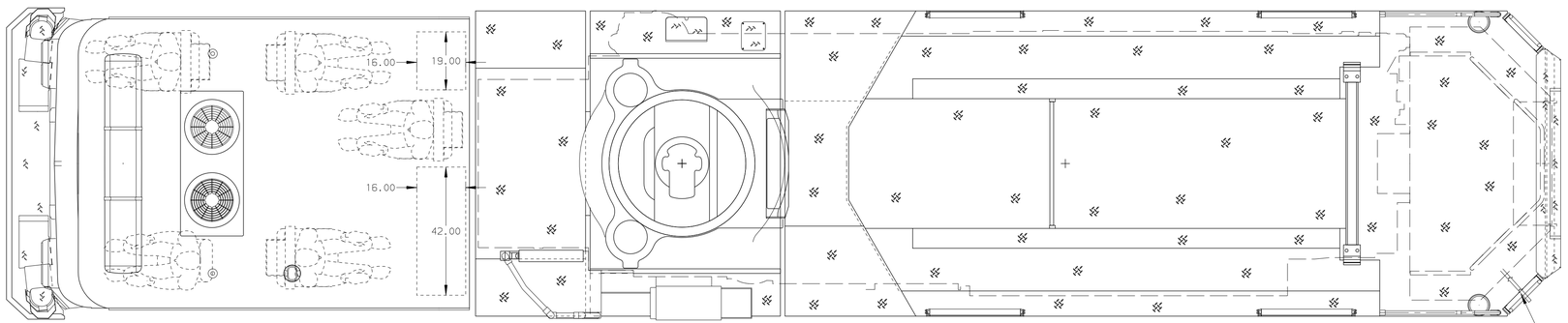

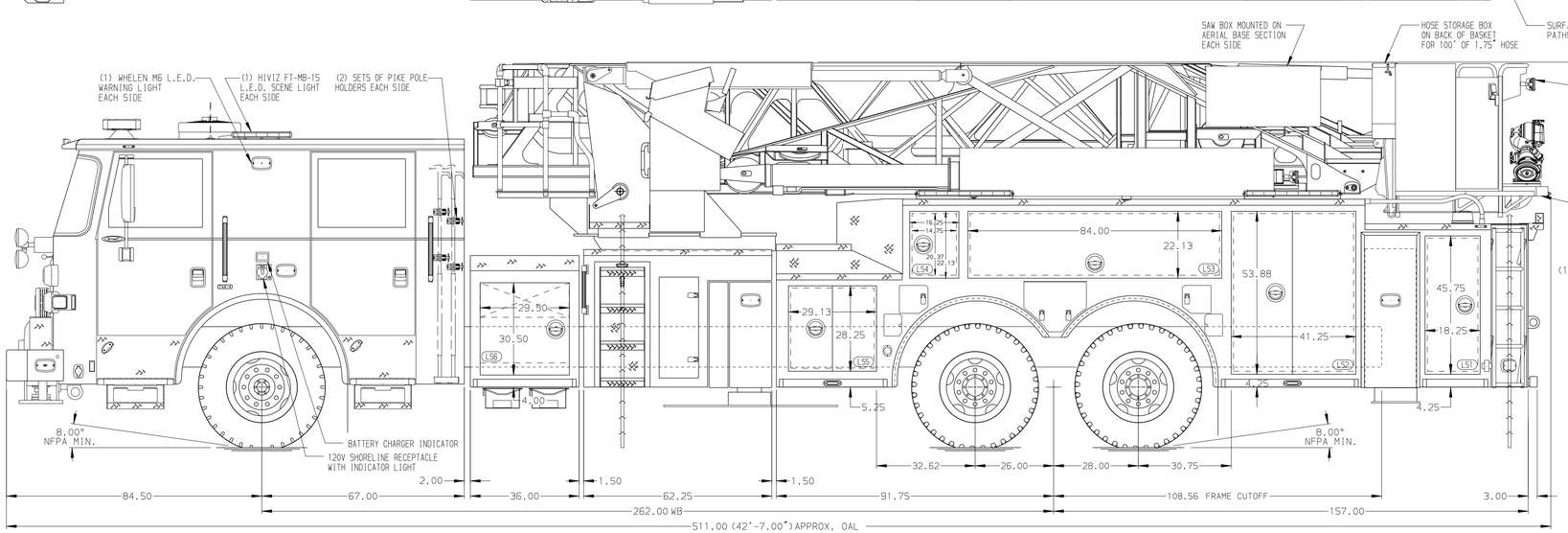

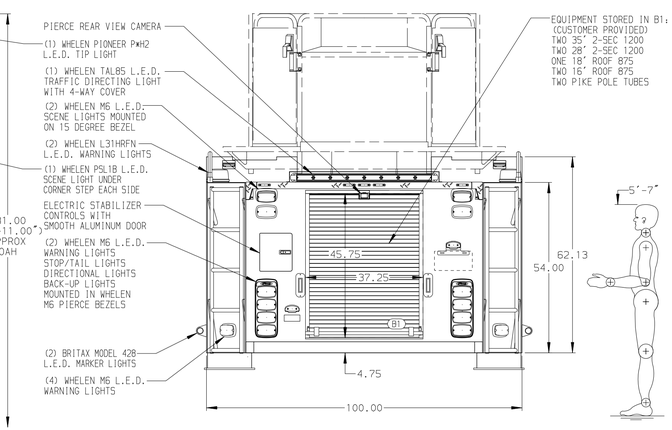

ALUMINUM BODY

SIDE ROLL AND FRONTAL IMPACT PROTECTION

NOTE

DIMENSIONS SHOWN ARE APPROXIMATE AND ARE SUBJECT TO MINOR DEVIATIONS AS MAY OCCUR OR BE NECESSARY IN CONSTRUCTION.
MINOR DETAILS NOT SHOWN.

1. AIR INLET WITH DISCONNECT COUPLING IN THE DRIVER SIDE STEPWELL
2. BATTERY CHARGER LOCATED BEHIND DRIVER'S SEAT
3. DC POWER TO AERIAL TIP
4. NON-RAISED AERIAL PEDESTAL
5. 3-in-1 LYFECOMBO BRACKETS AT AERIAL BASKET
6. 2-WAY INTERCOM SYSTEM BETWEEN AERIAL TIP AND TURNTABLE
7. WIRELESS CAMERA SYSTEM AT AERIAL BASKET

REV	DATE	BY	CH
▽	-	-	-

CHASSIS DATA
MAKE: PIERCE
MODEL: ARROW XT

CUSTOMER APPROVAL
APPROVED BY:
DATE:

Pierce MANUFACTURING INC.

TITLE: 100' ASCENDANT AERIAL TOWER AND BODY ASSEMBLY
NO PUMP, NO TANK

FOR: MONTGOMERY COUNTY FIRE AND RESCUE
ROCKVILLE, MARYLAND

DWG NO. 37132AD-SH1

JOB NO.	37132 01-03
SCALE	1:24
DATE	
DRAWN BY	JGA 19JAN22
CHECKED BY	JBL 20JAN22
SHEET SIZE	D
SHEET NO.	1 OF 1

View File Created 20-JAN-2022 09:01:44