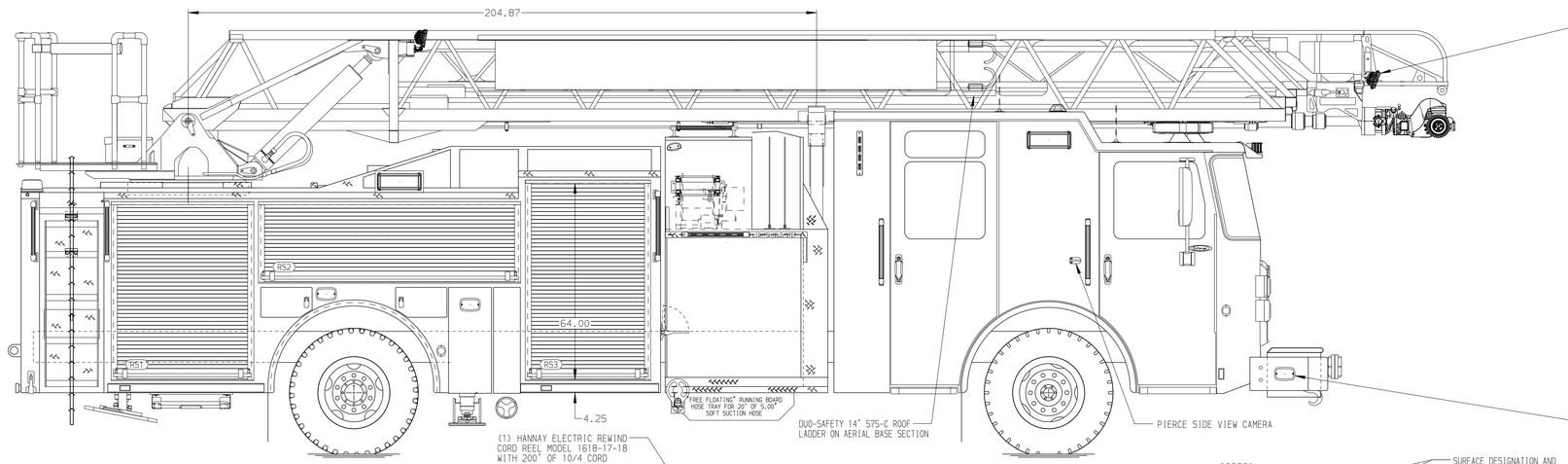

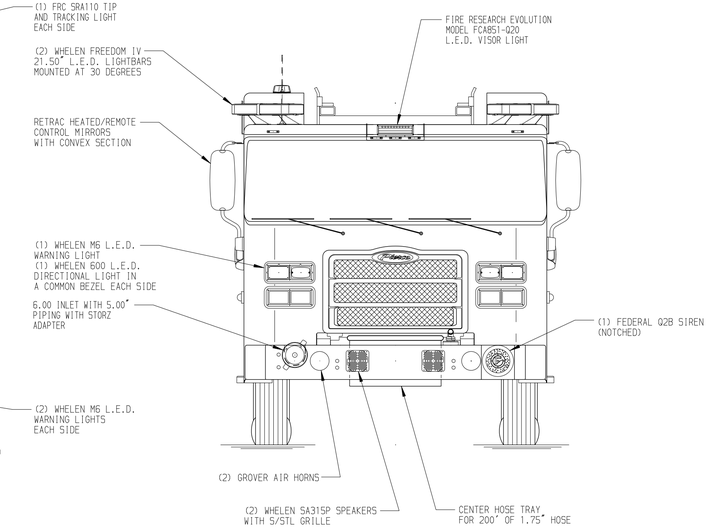

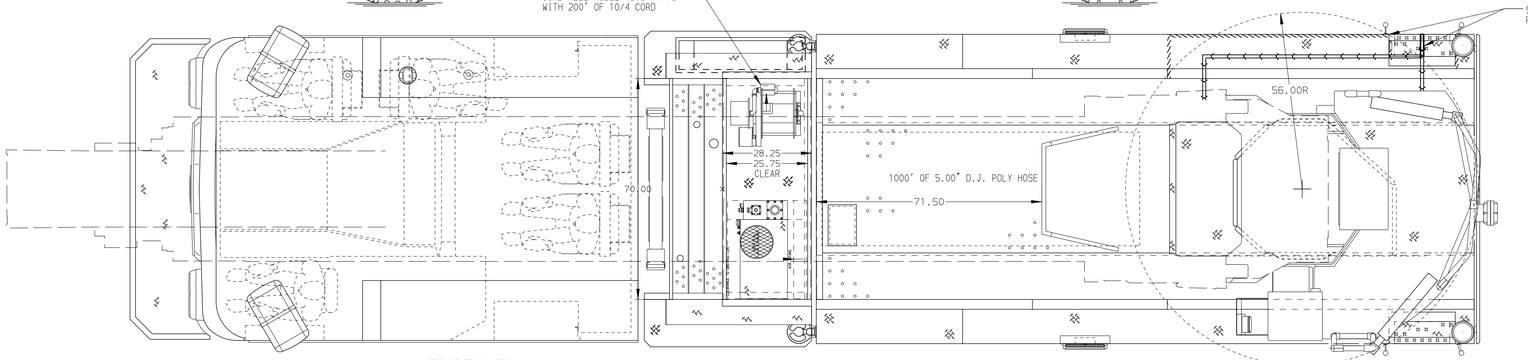

BODY	WATER TANK
107' ASL Aluminum Body	500 Gallon Poly Water Tank
COMPT,LEFT SIDE FRONT	Foam System
Full Height Rollup Forward	Foam System Not Required
COMPT,LEFT SIDE REAR	Foam Cell
Full Height Rollup Rearward	Foam Cell Not Required
COMPT,RIGHT SIDE FRONT	
Full Height Rollup Forward	
COMPT,RIGHT SIDE REAR	
Full Height Rollup Rearward	

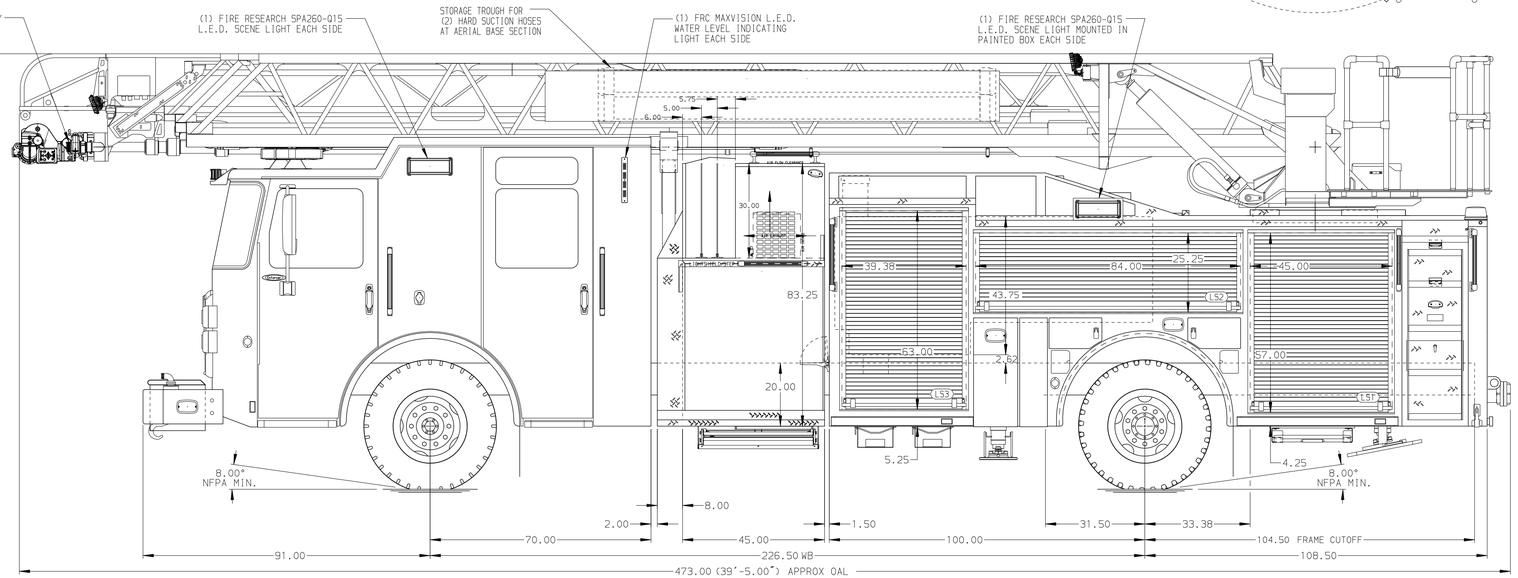

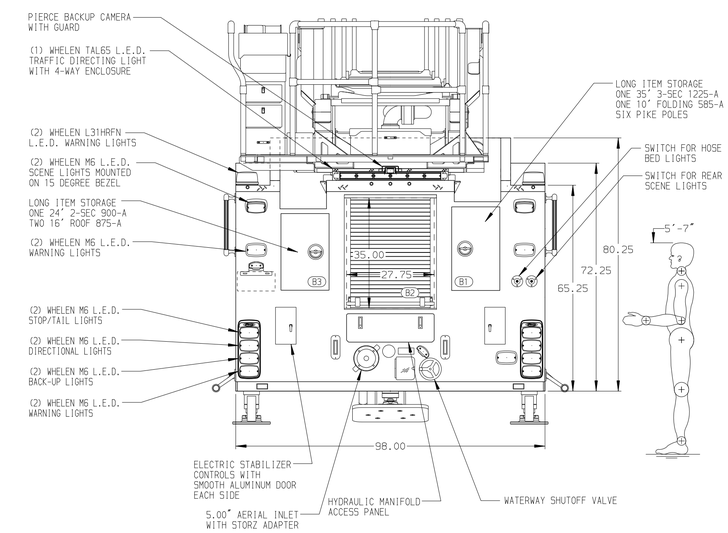

CHASSIS	CAB	AXLE,FRONT,CUSTOM	TRANSMISSION	PUMPHOUSE	CROSSLAYS,1.50"	SPEEDLAYS
Enforcer Chassis	7010 Notched Enforcer Cab	21,500 Lb Meritor Axle	ALlison 5th Gen, 3000 EVS P	45" Control Zone Side Mount	(2) 1.50", 200' of 1.75"	Speedlays Not Required
ENGINE	BUMPER	AXLE,REAR		PUMP	CROSSLAYS,2.50"	GENERATOR
450 HP Cummins L9 Engine	22" Extended Painted Steel	33,500 Lb Meritor Axle		1500 GPM Hale QMAX	(1) 2.50", 200' of 2.50"	Harrison 6kW MSV Hydraulic

CUSTOMER APPROVAL

APPROVED BY: _____

DATE: _____

Pierce MANUFACTURING INC.

NOTE

DIMENSIONS SHOWN ARE APPROXIMATE AND ARE SUBJECT TO MINOR DEVIATIONS AS MAY OCCUR OR BE NECESSARY IN CONSTRUCTION.
MINOR DETAILS NOT SHOWN.

1. ONE 1.50 OUTLET WITH 2.00 PIPING AND SWIVEL LOCATED TOP LEFT BUMPER DECK
2. SHORELINE RECEPTACLE WITH KUSSMAUL SUPER AUTO-EJECT LOCATED ON DRIVER SIDE OF THE CAB
3. AIR INLET WITH DISCONNECT COUPLING IN THE DRIVER SIDE STEPWELL
4. AIR OUTLET WITH SHUT OFF VALVE LOCATED ON DRIVER SIDE PUMP PANEL
5. BATTERY CHARGER LOCATED IN COMPARTMENT PER SHOP ORDER
6. BATTERY CHARGE INDICATOR LOCATED ON THE DRIVER SIDE SEAT RISER
7. DUAL L.E.D. LIGHT STRIPS LOCATED IN HOSE BED
8. FIVE ADJUSTABLE SHELVES IN COMPARTMENTS PER SHOP ORDER
9. FOUR FLOOR MOUNTED SLIDE-OUT TRAYS IN COMPARTMENTS PER SHOP ORDER
10. ONE SWING-OUT ALUMINUM TOOL BOARD IN COMPARTMENT PER SHOP ORDER
11. CIRCUIT BREAKER PANEL IN COMPARTMENT PER SHOP ORDER
12. NON-RAISED AERIAL PEDESTAL
13. LIFTING EYE ROPE RESCUE ATTACHMENT AT AERIAL TIP
14. 1500 GPM HIGH FLOW WATERWAY

REV	DATE	BY	CH
▽	-	-	-

CHASSIS DATA

MAKE: PIERCE

MODEL: ENFORCER

TITLE: 107' ASCENDANT AERIAL LADDER AND BODY ASSEMBLY
-

FOR: ST TAMMANY FIRE PROTECTION DISTRICT
MANDEVILLE, LA

DWG NO.: 37134AD

JOB NO.	37134
SCALE	1:24
DATE	
DRAWN BY	LWE
	27OCT21
CHECKED BY	NDA
	03NOV21
SHEET SIZE	D
SHEET NO.	1 OF 1

View File Created 03-NOV-2021 12:36:14